T PRINT 10 ARTWORK SETUP GUIDE

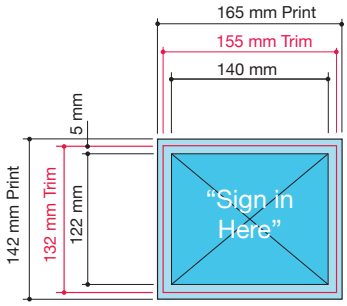

UPPER PANEL

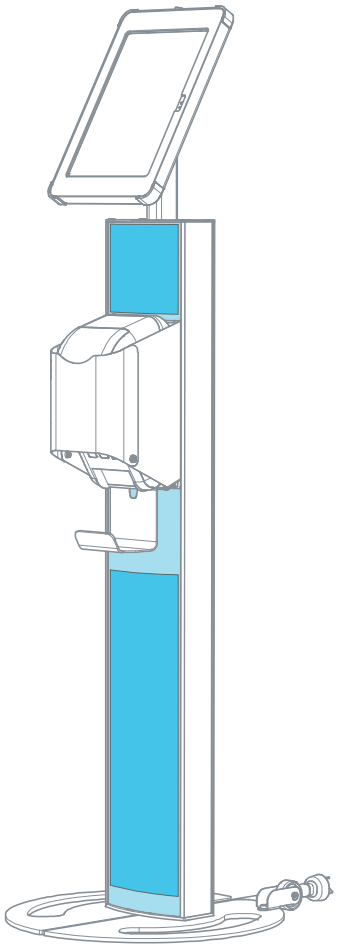

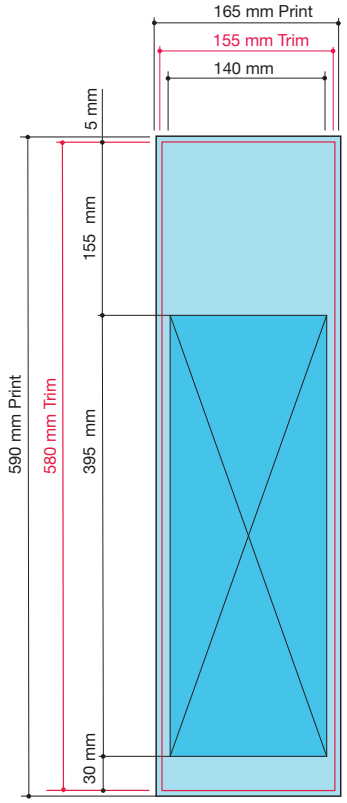

LOWER PANEL

ARTWORK PRINTING GUIDELINES

Your artwork will be digitally printed onto 0.8 mm polypropylene sheet for maximum flexibility and durability.

Please use the following checklist to ensure the best possible print quality & accuracy:

- All artwork to be supplied as 1:1 press quality PDF
- Colour Mode is set to CMYK
- Overall panel size dimensions are correct
- 5mm Bleed and Clear Text printing areas are correct
- NO trim marks visible
- Embedded images are high resolution 300dpi and not distorted
- Solid colours are used wherever possible
- Pantone Swatch references have been supplied (where applicable)
- Text has been proof-read and spell checked
- File sizes are not larger than 50MB

PLEASE NOTE

We strongly recommend that you thoroughly re-check your artwork before submitting it for printing.

Once artwork is received it will be printed as supplied with no further checks or adjustments. If errors are detected after your artwork has been released to the printer, a re-print fee will apply & delivery delays

PRINT AREA

CLEAR TEXT AREA [avoids components]

TRIM