T Series
Print B-10

Version 1.0

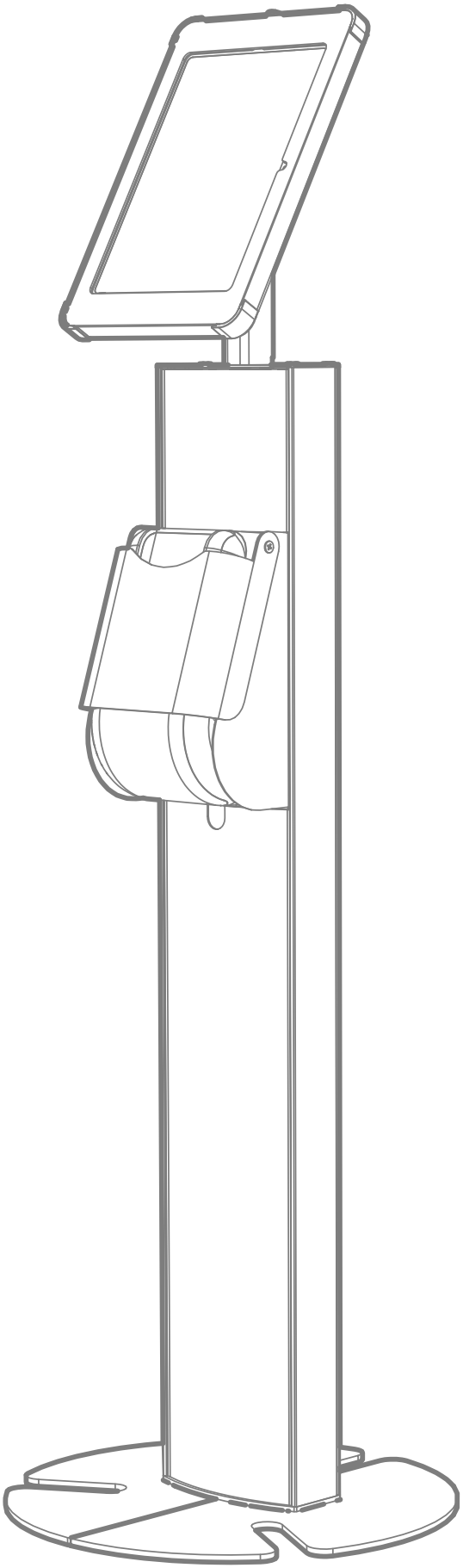

SPROCKET Assembly Guide

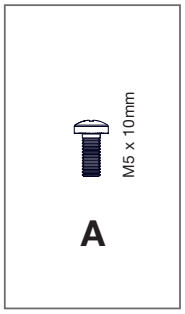

x6

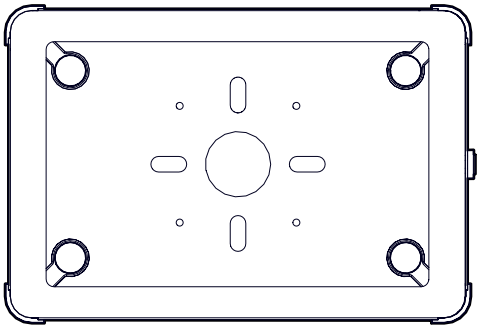

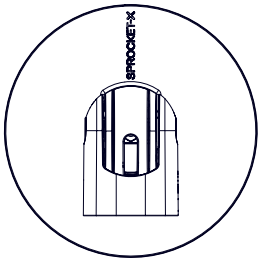

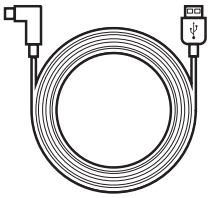

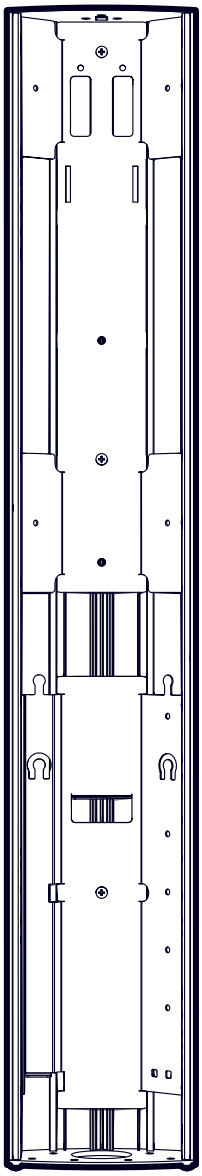

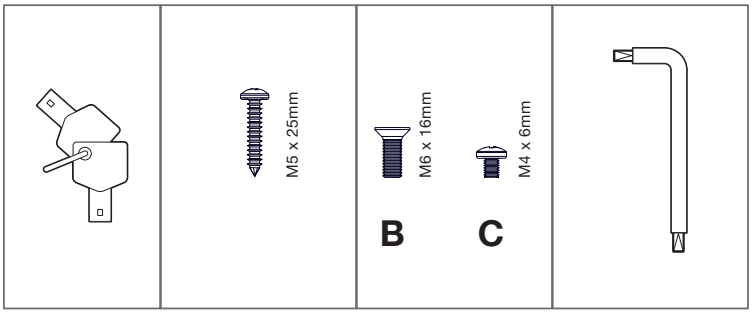

x2 x4 x4 x4 x1

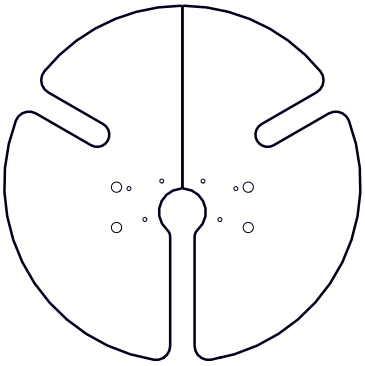

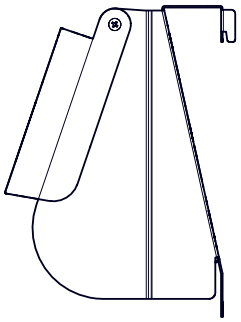

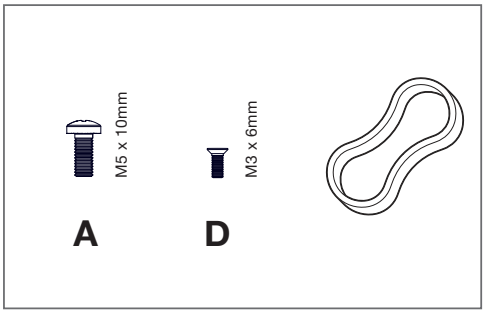

x1 x4 x2

STEP 1/11

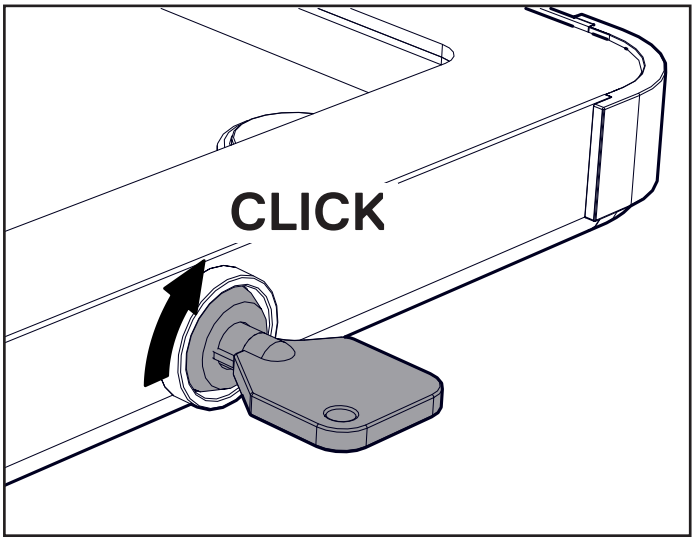

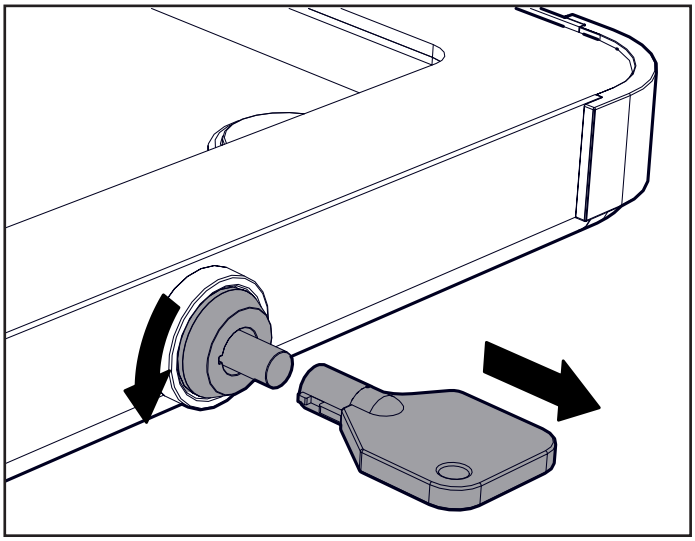

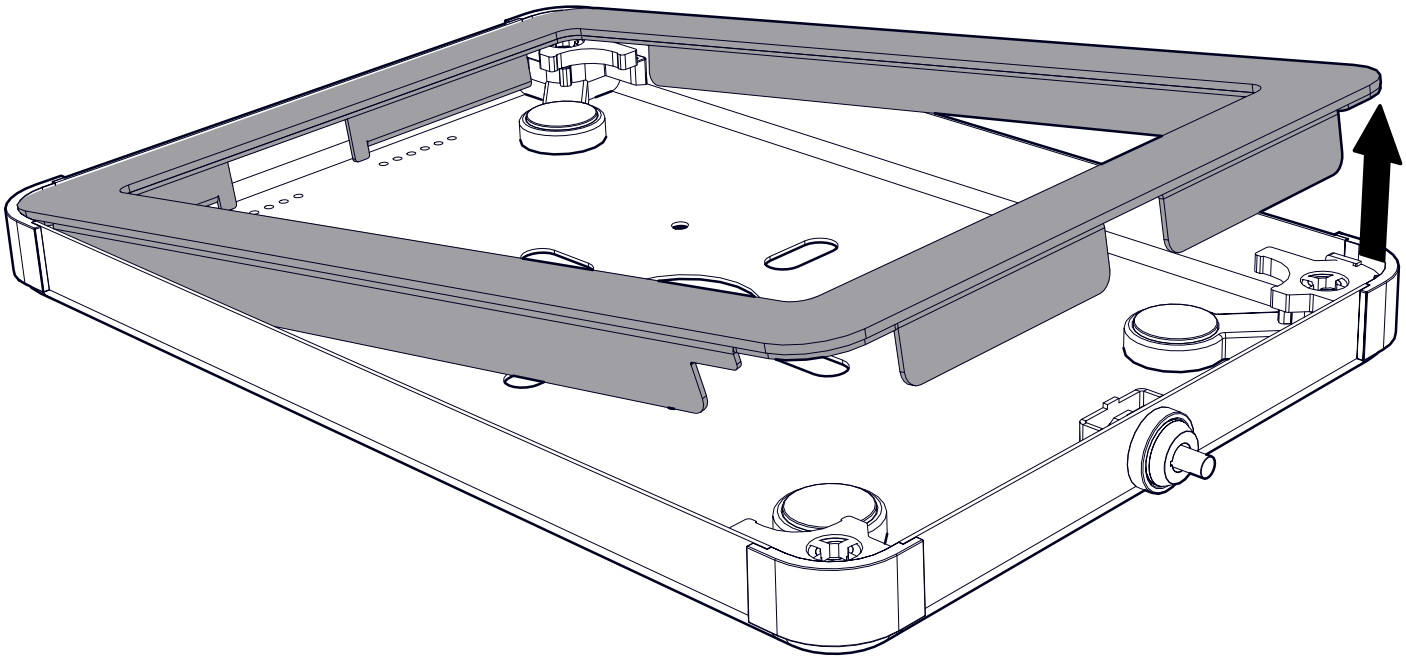

STEP 2/11

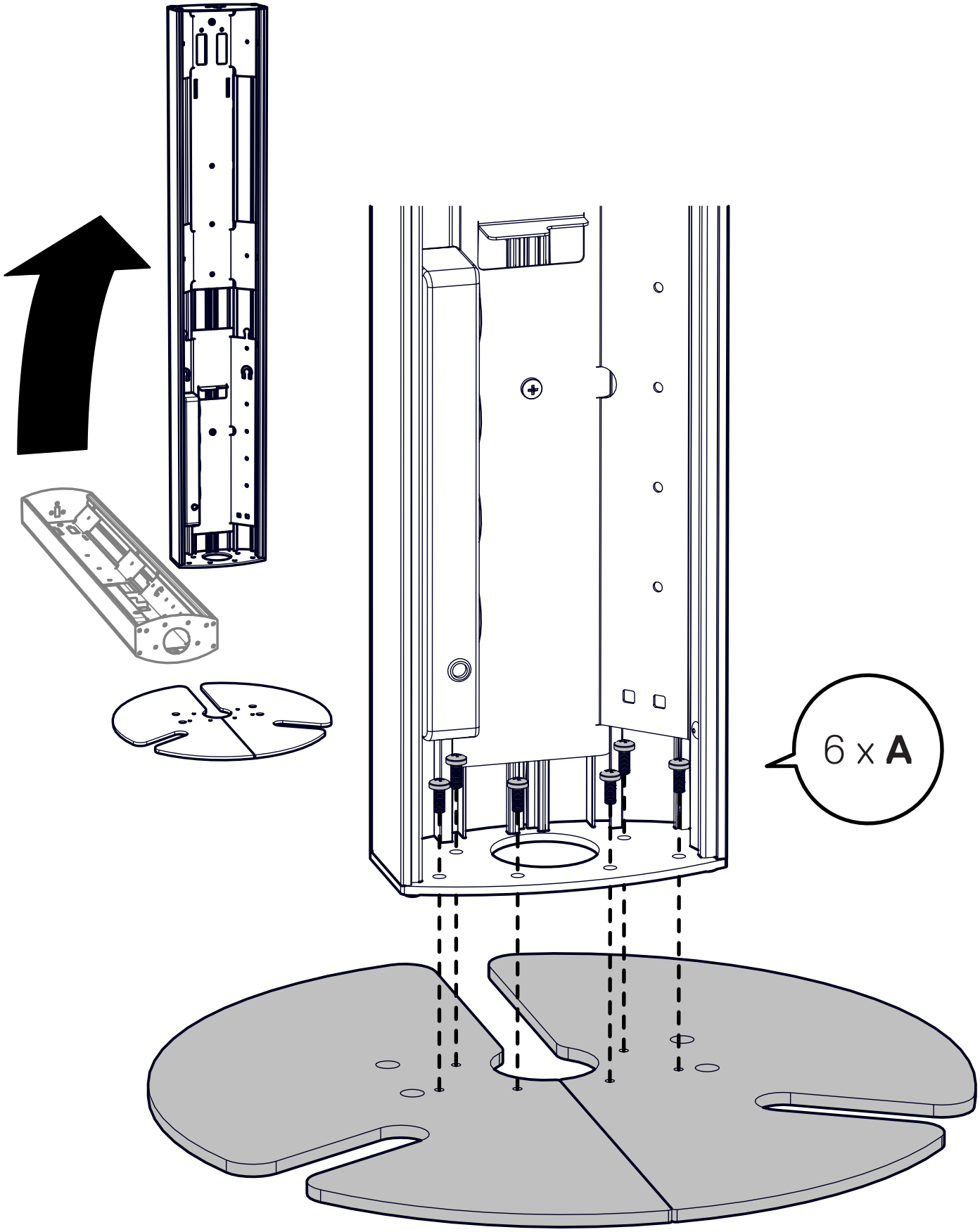

STEP 3/11

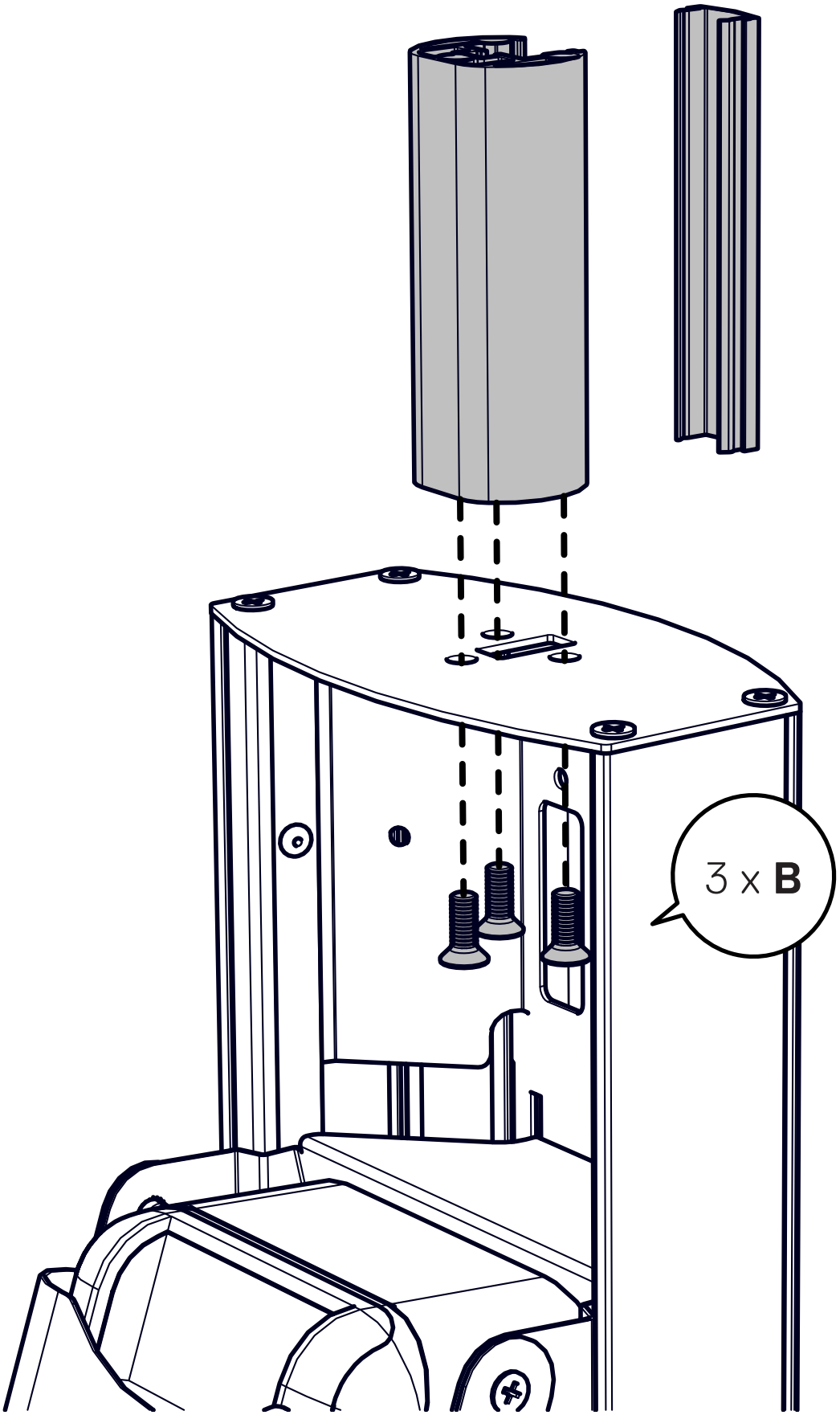

STEP 4/11

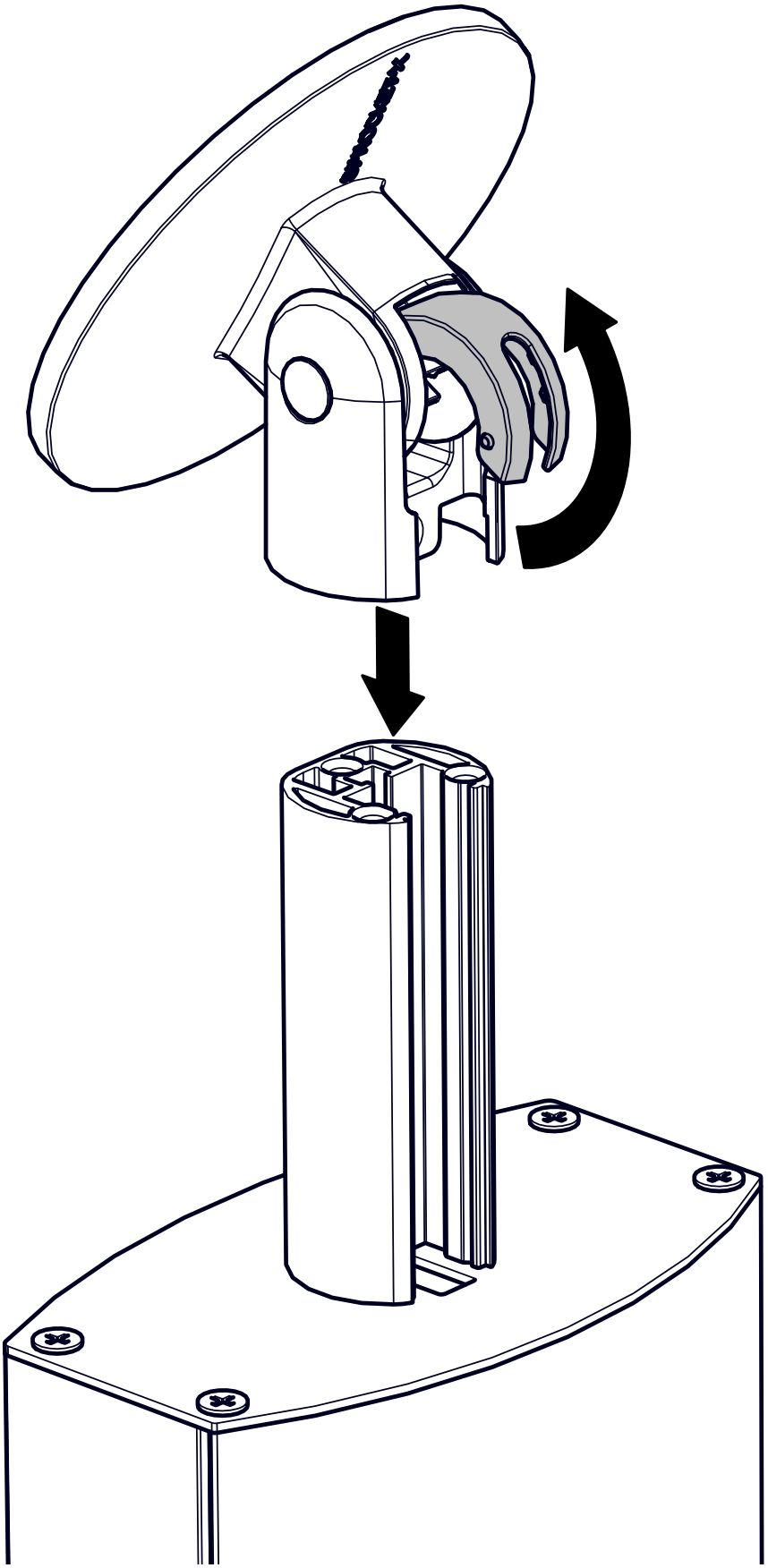

STEP 5/11

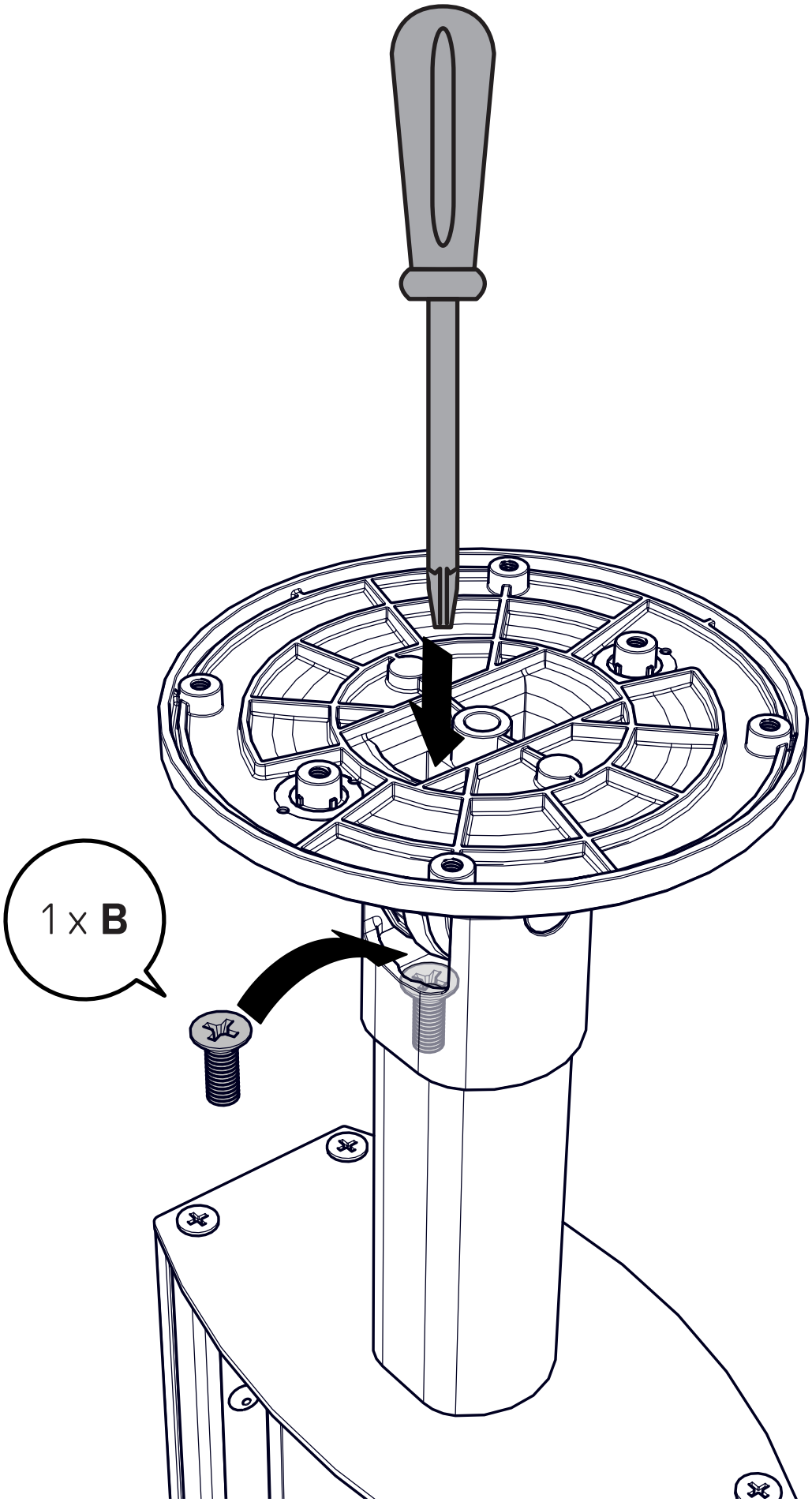

STEP 6/11

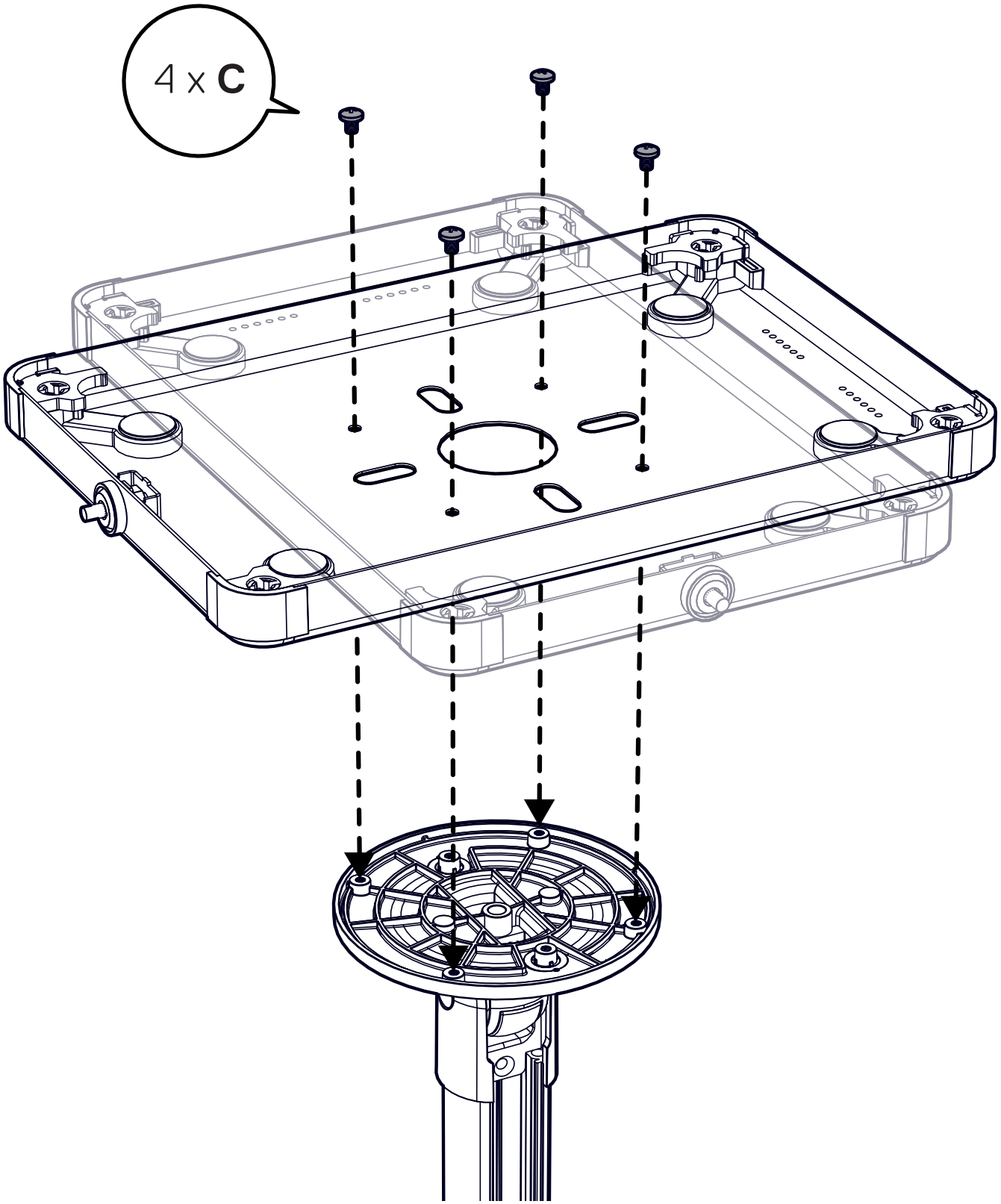

STEP 7/11

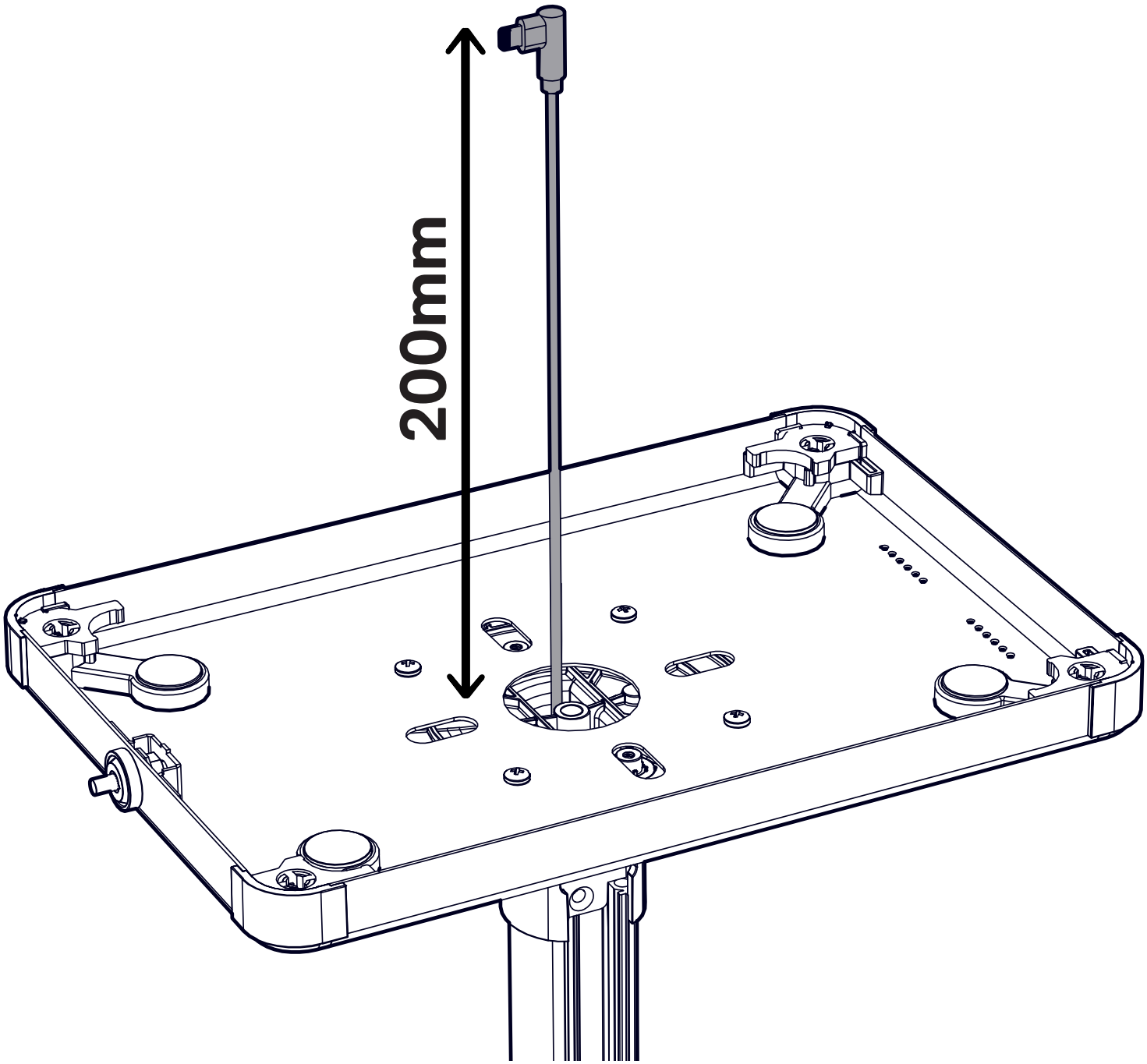

STEP 8/11

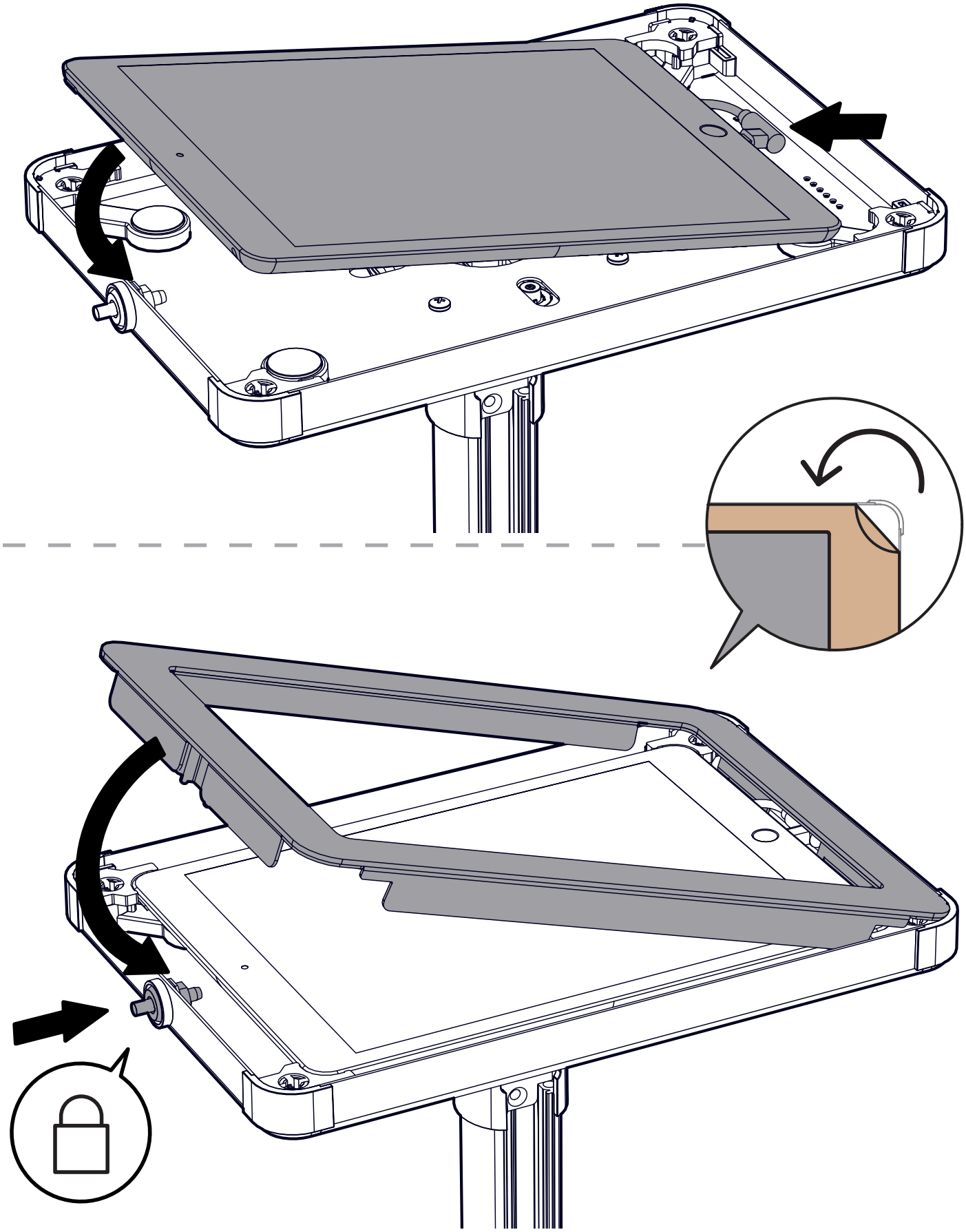

STEP 9/11

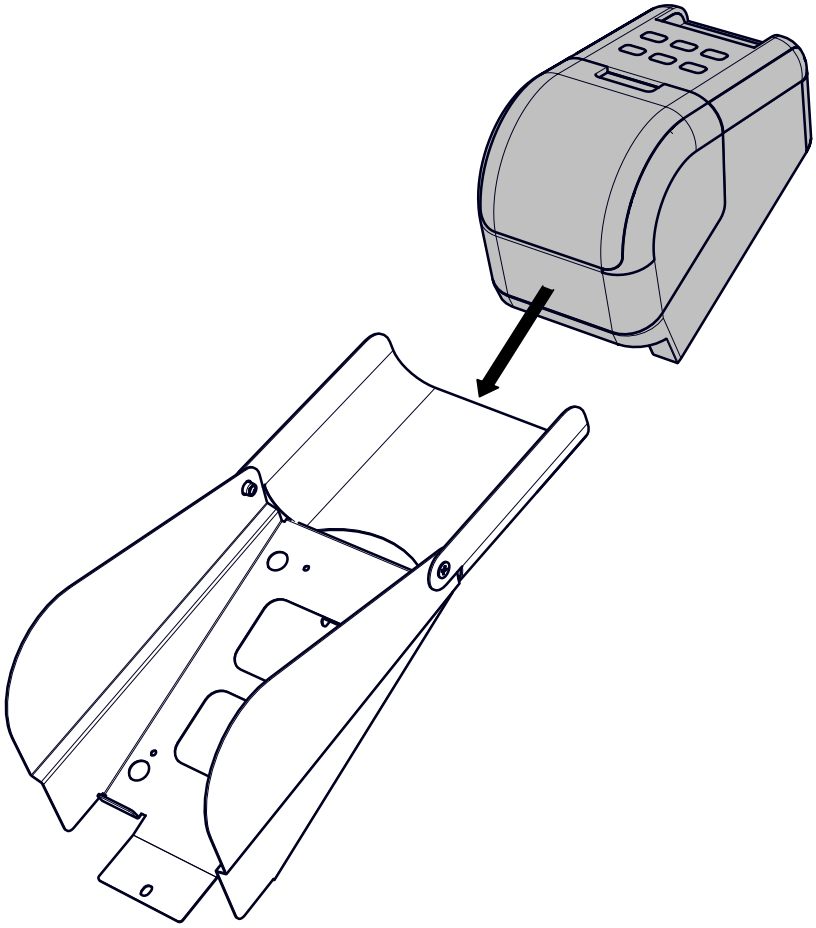

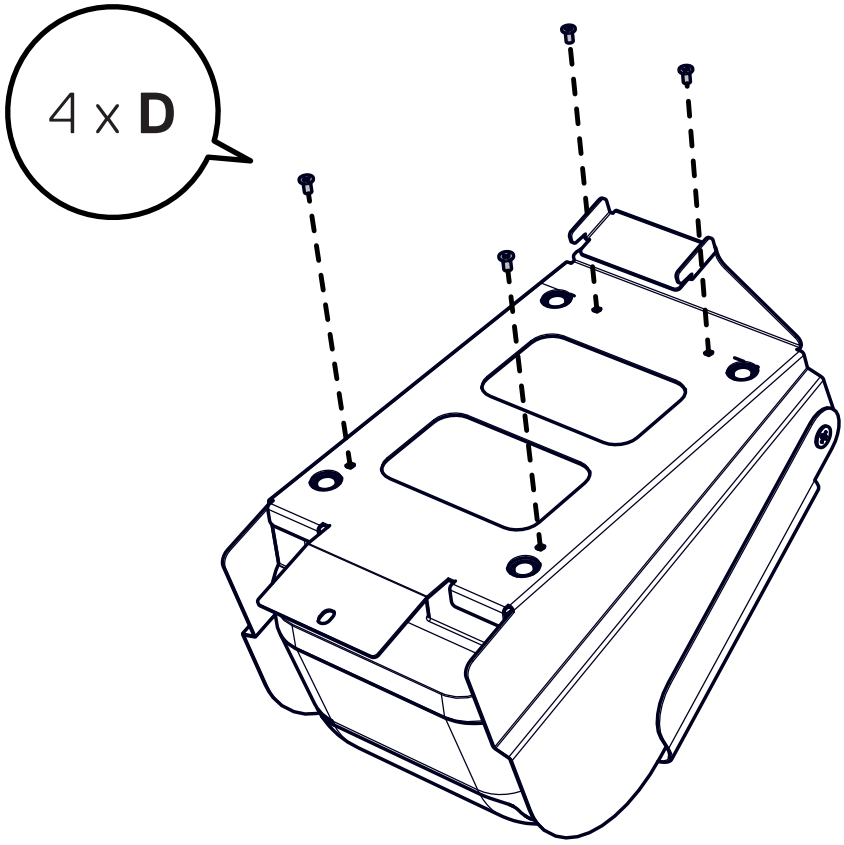

STEP 10/11

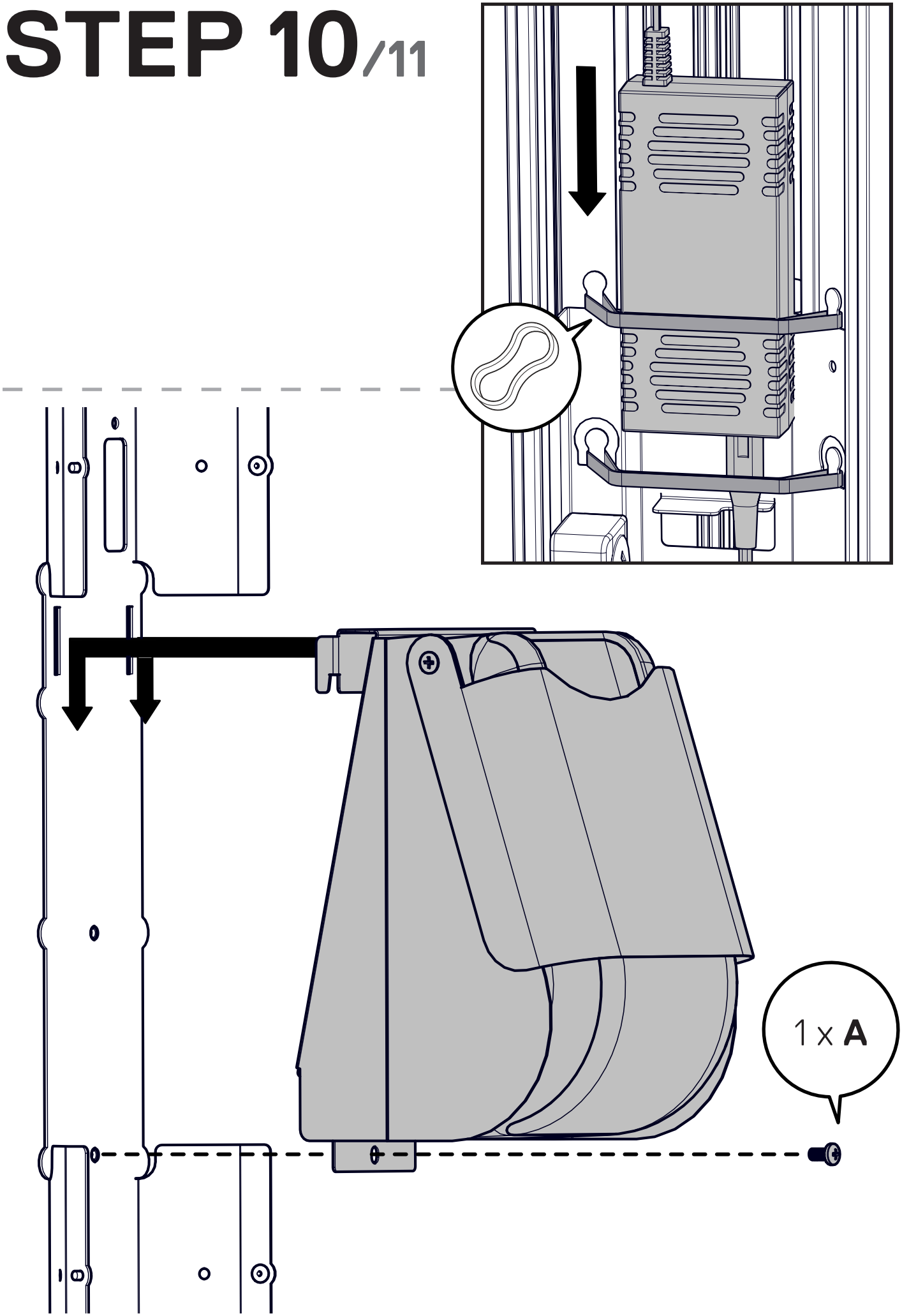
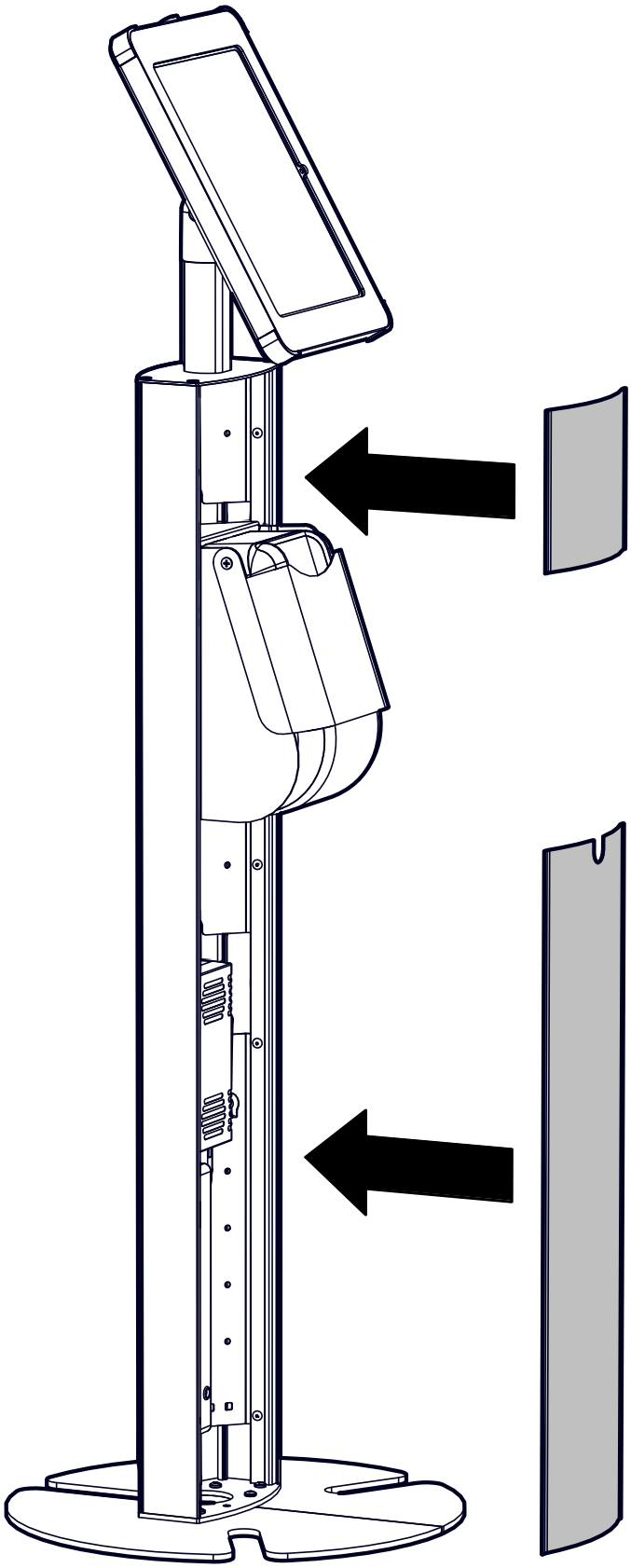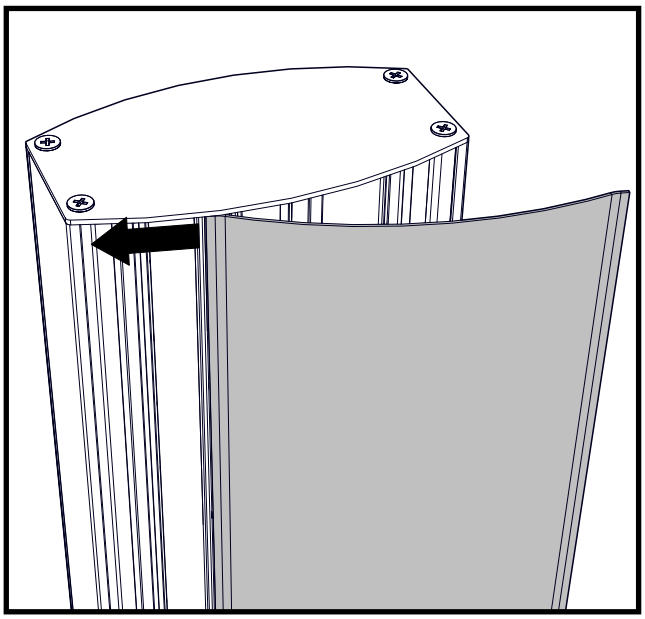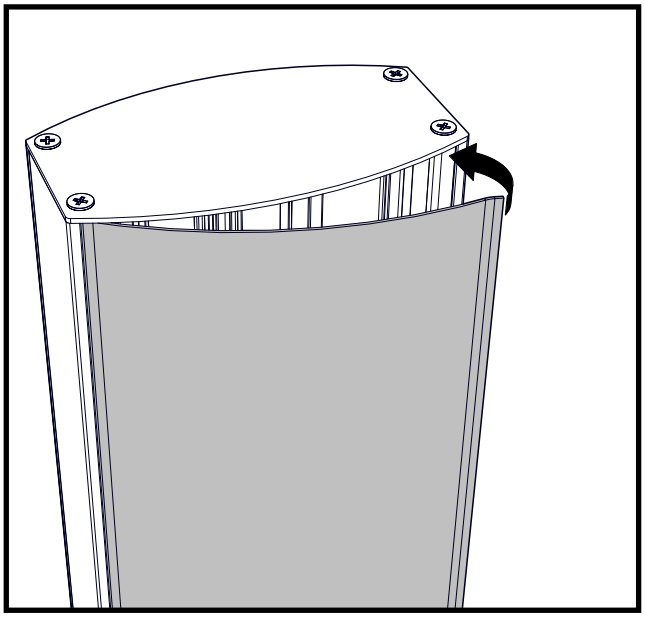
STEP 11/11