T Series
Print B-15

Version 1.0

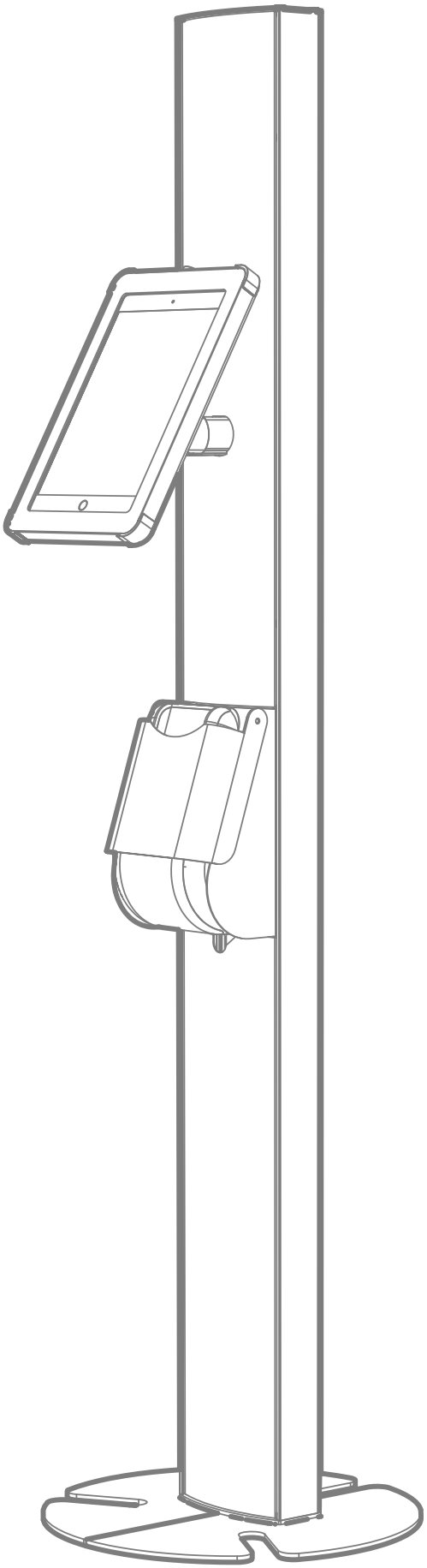

SPROCKET Assembly Guide

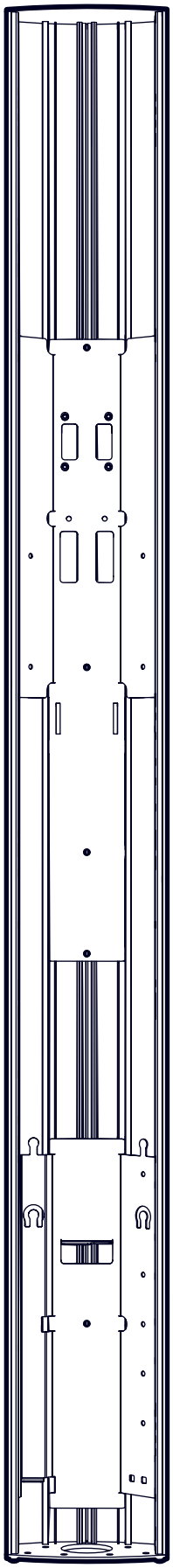

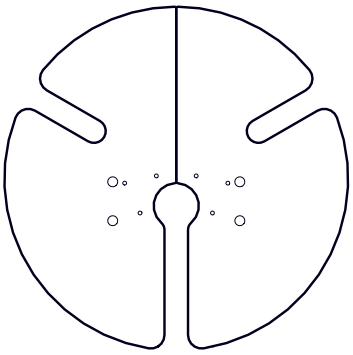

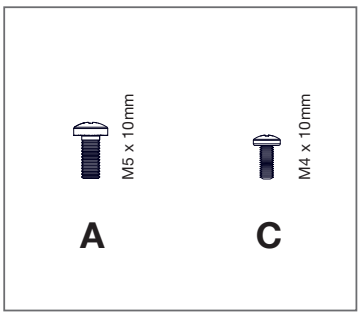

x6 x4

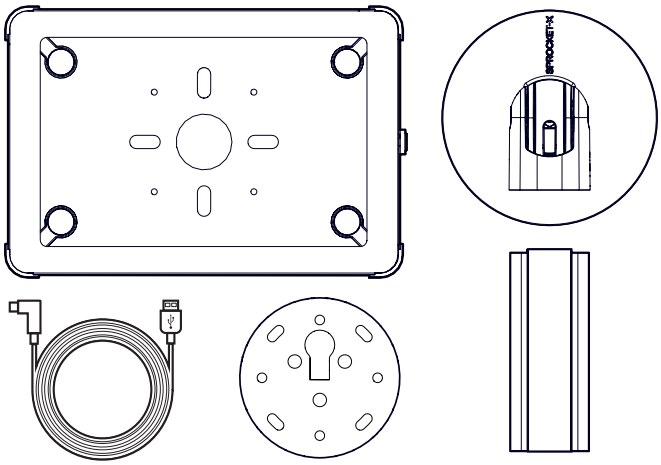

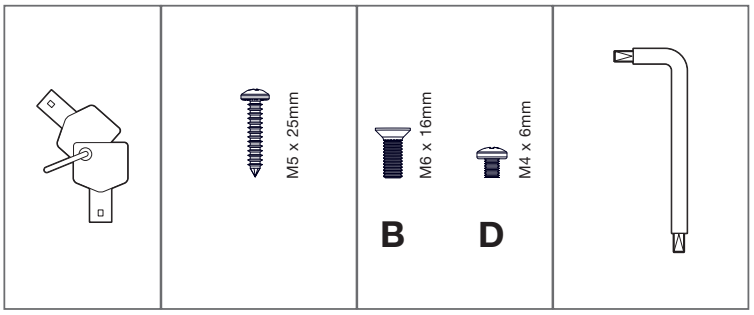

x2 x4 x4 x4 x1

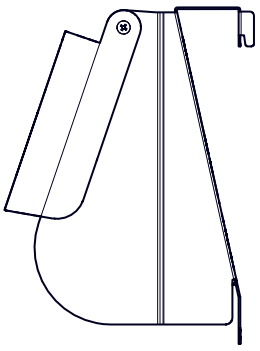

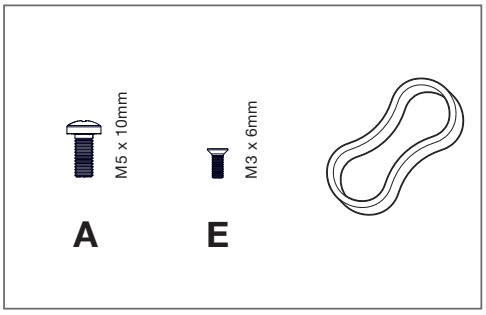

x1 x4 x2

STEP 1/12

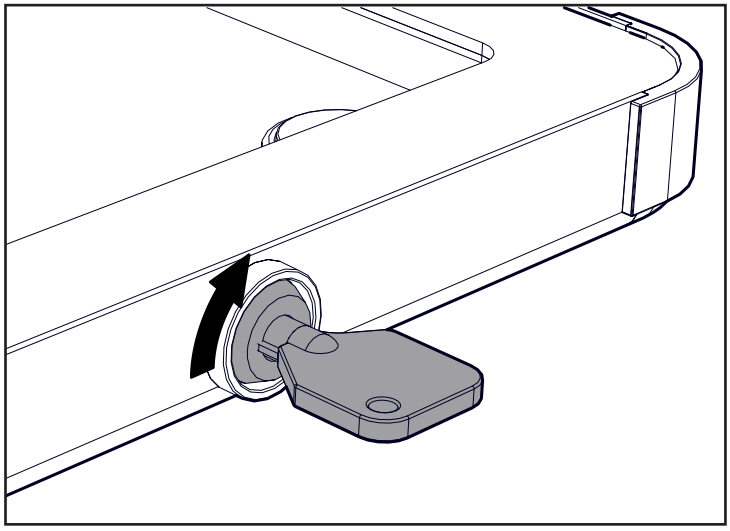

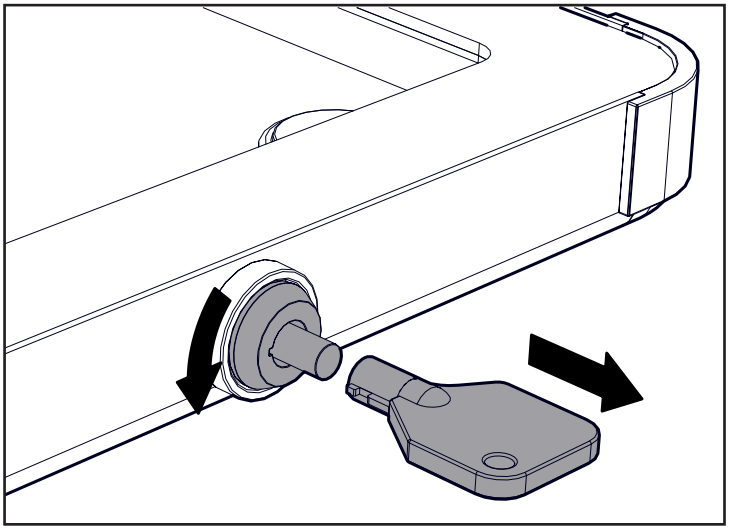

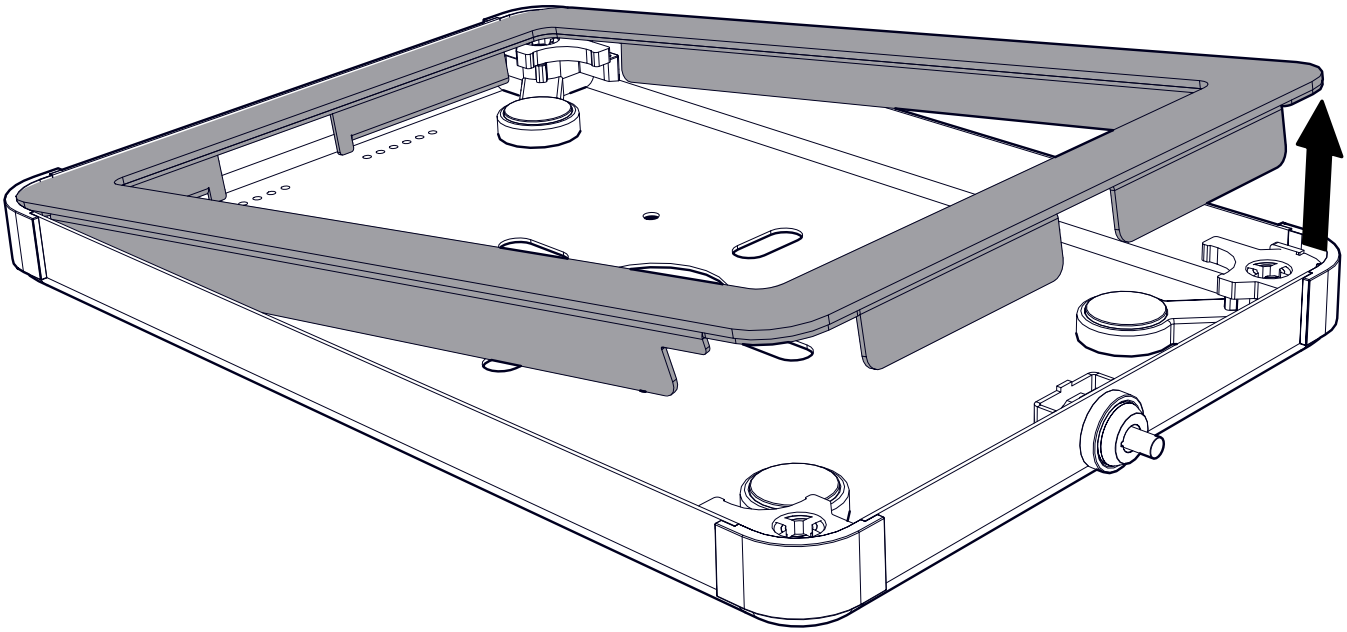

STEP 2/12

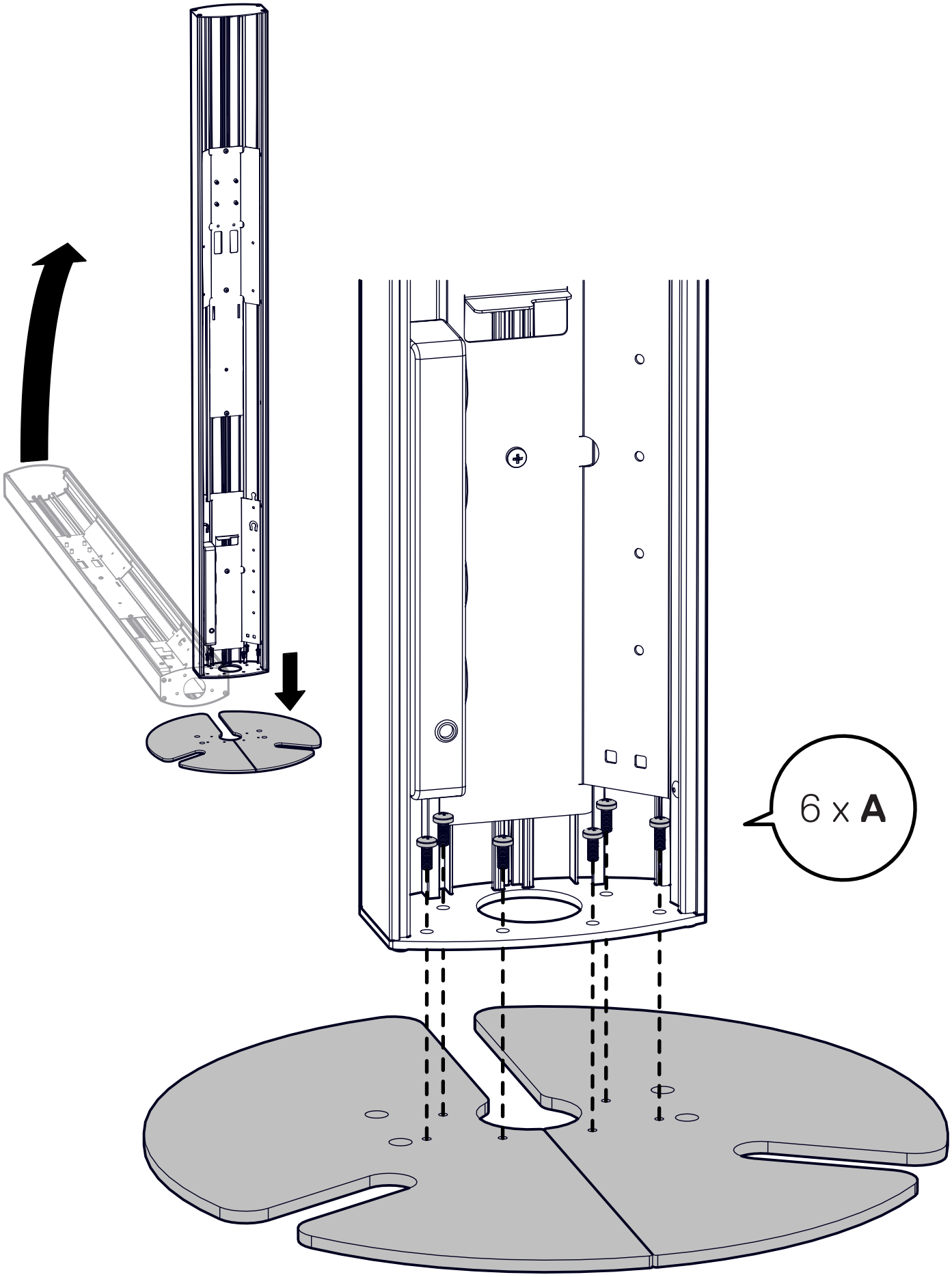

STEP 3/12

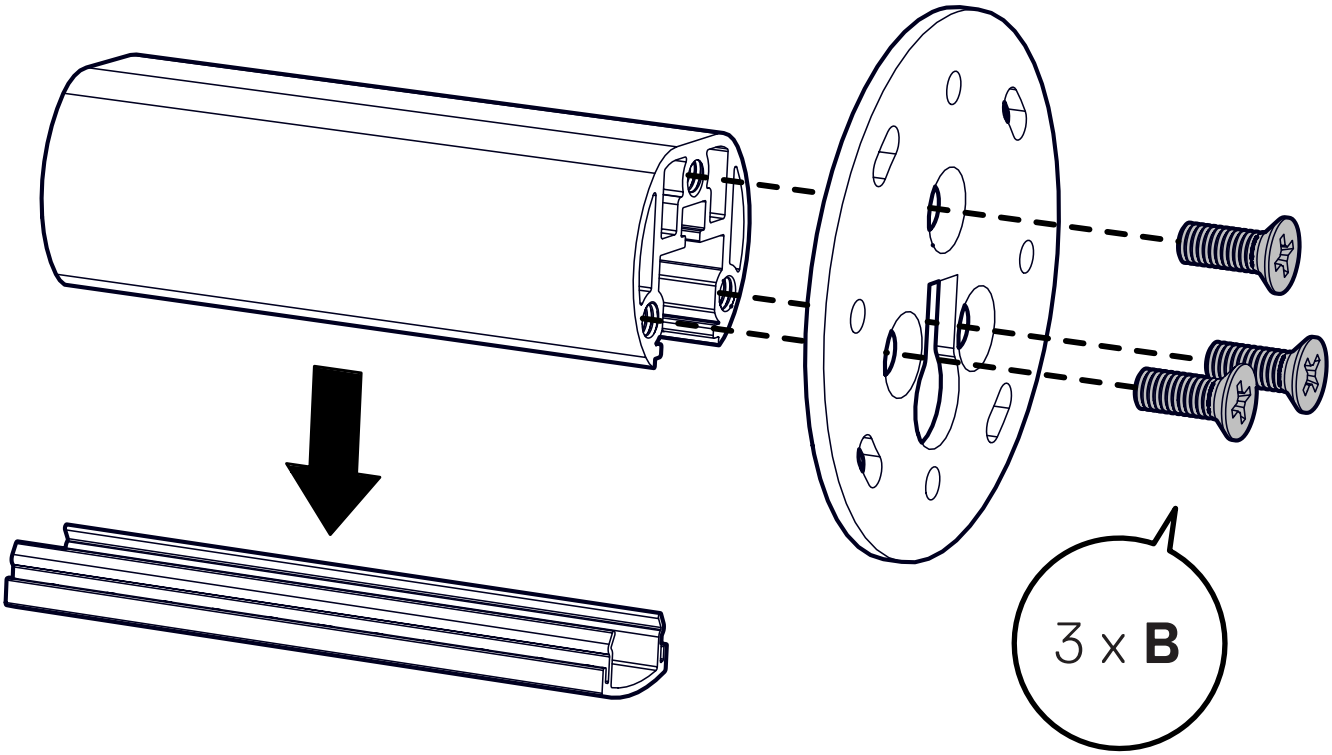

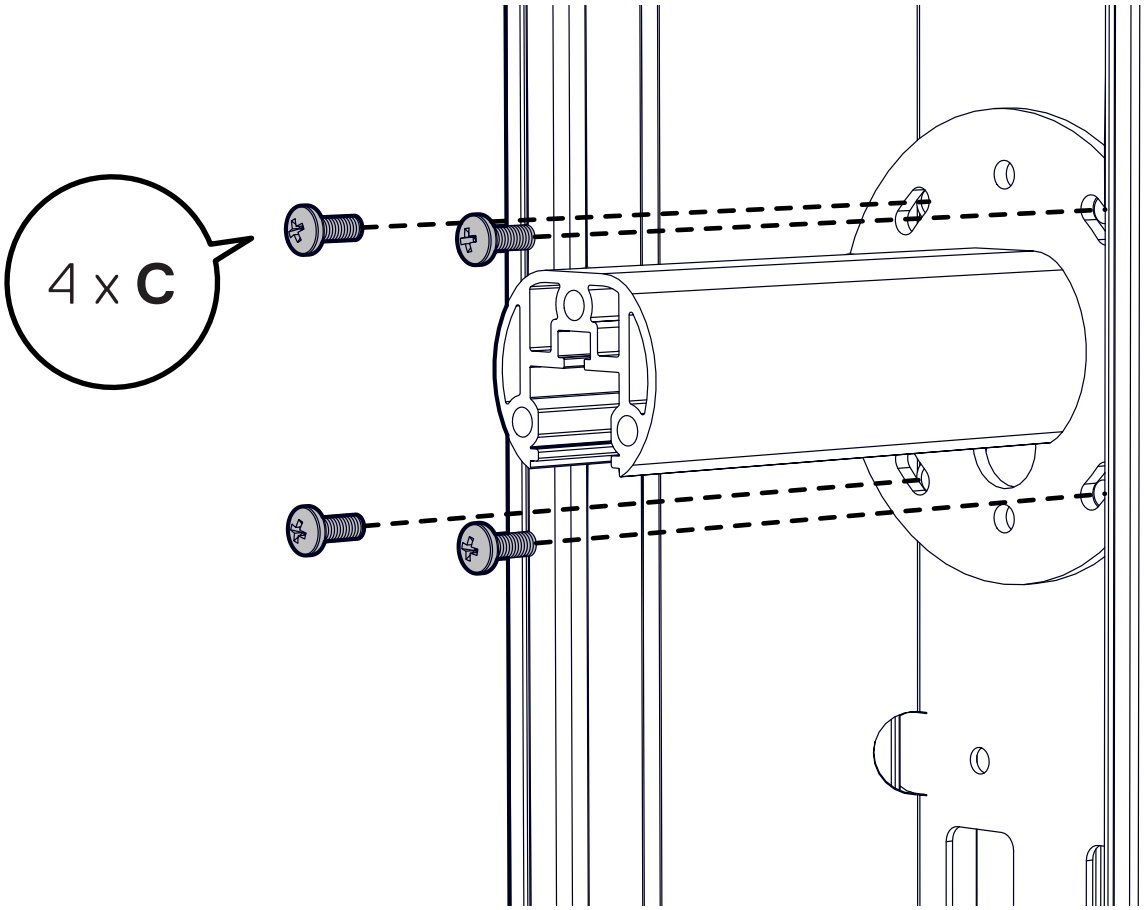

STEP 4/12

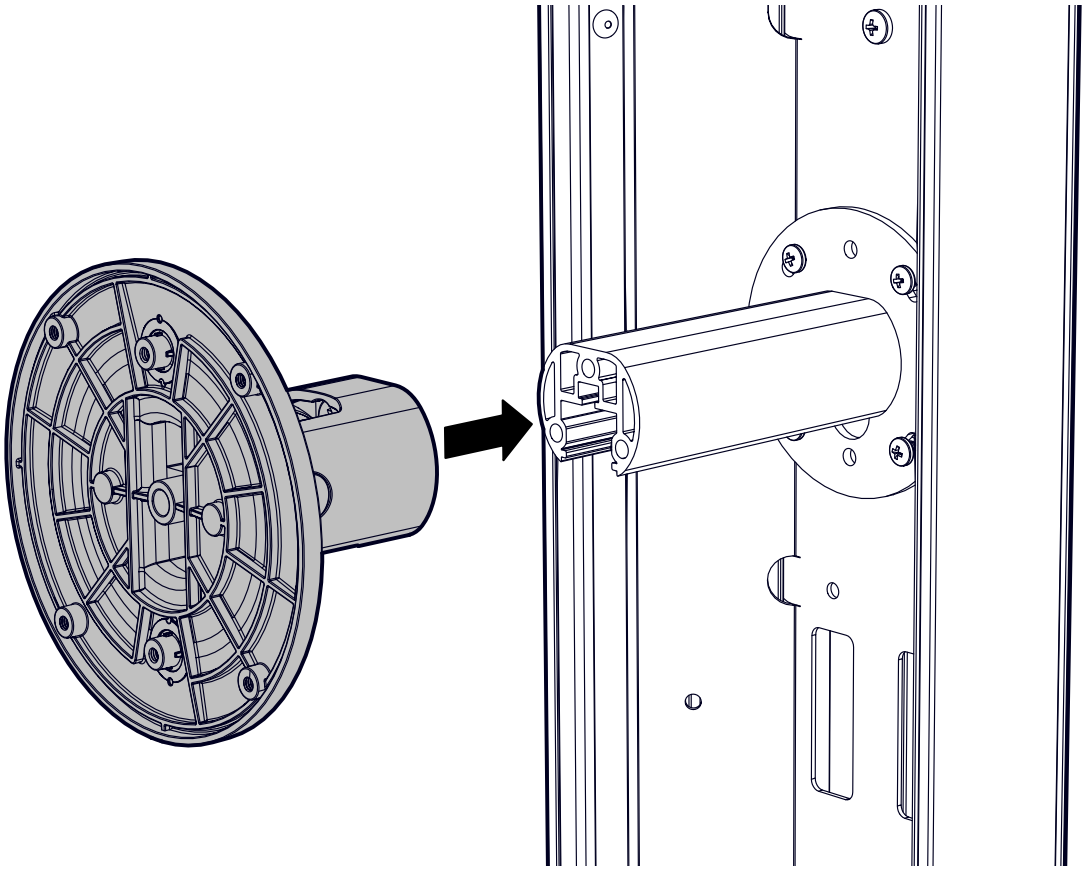

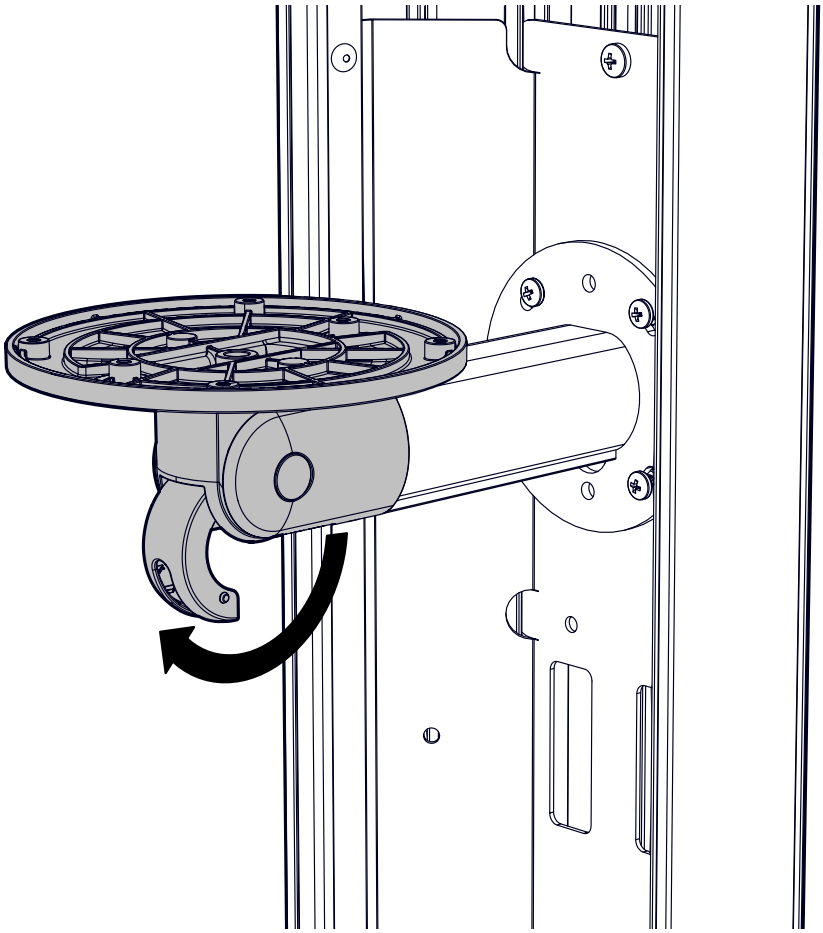

STEP 5/12

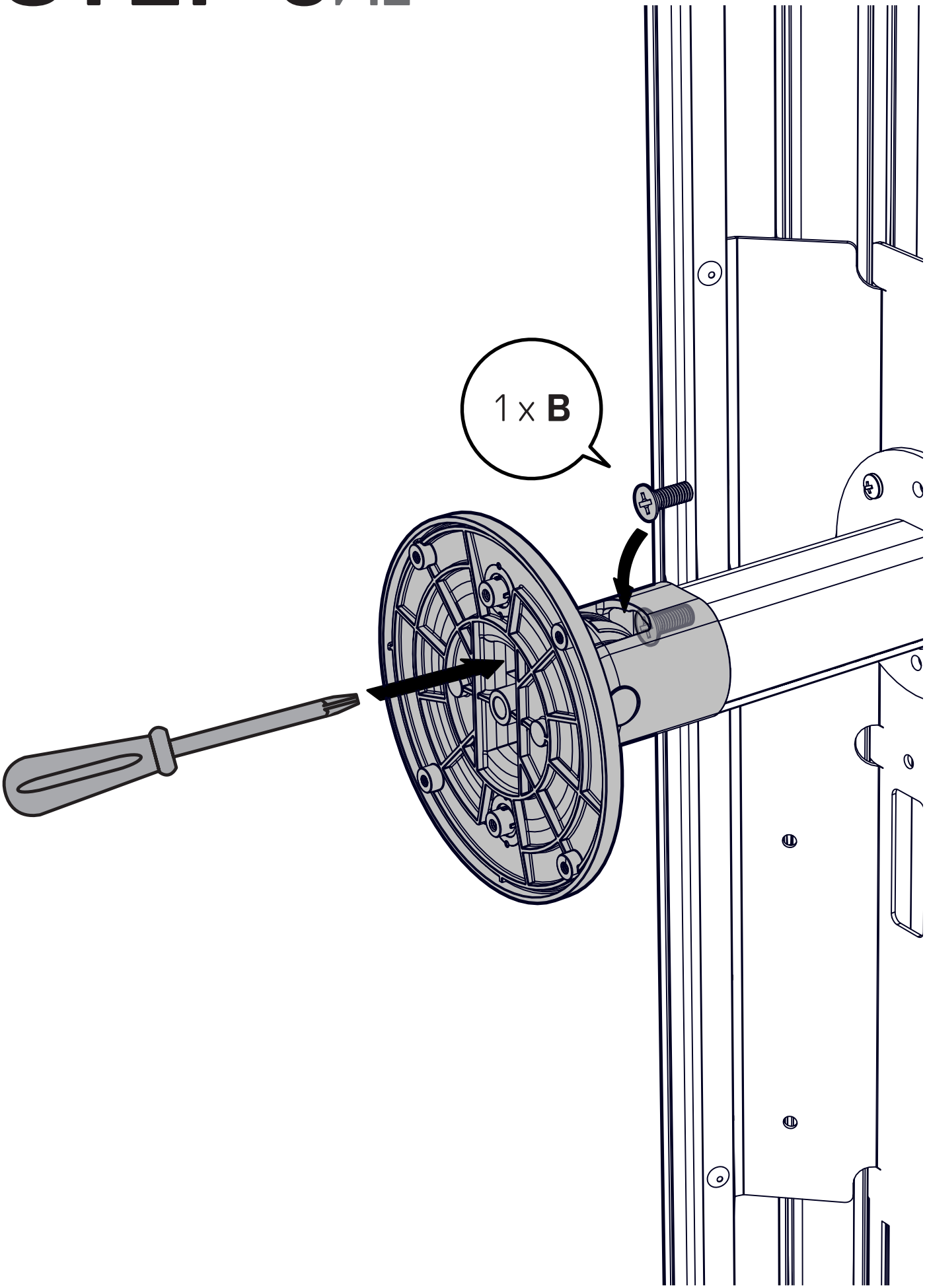

STEP 6/12

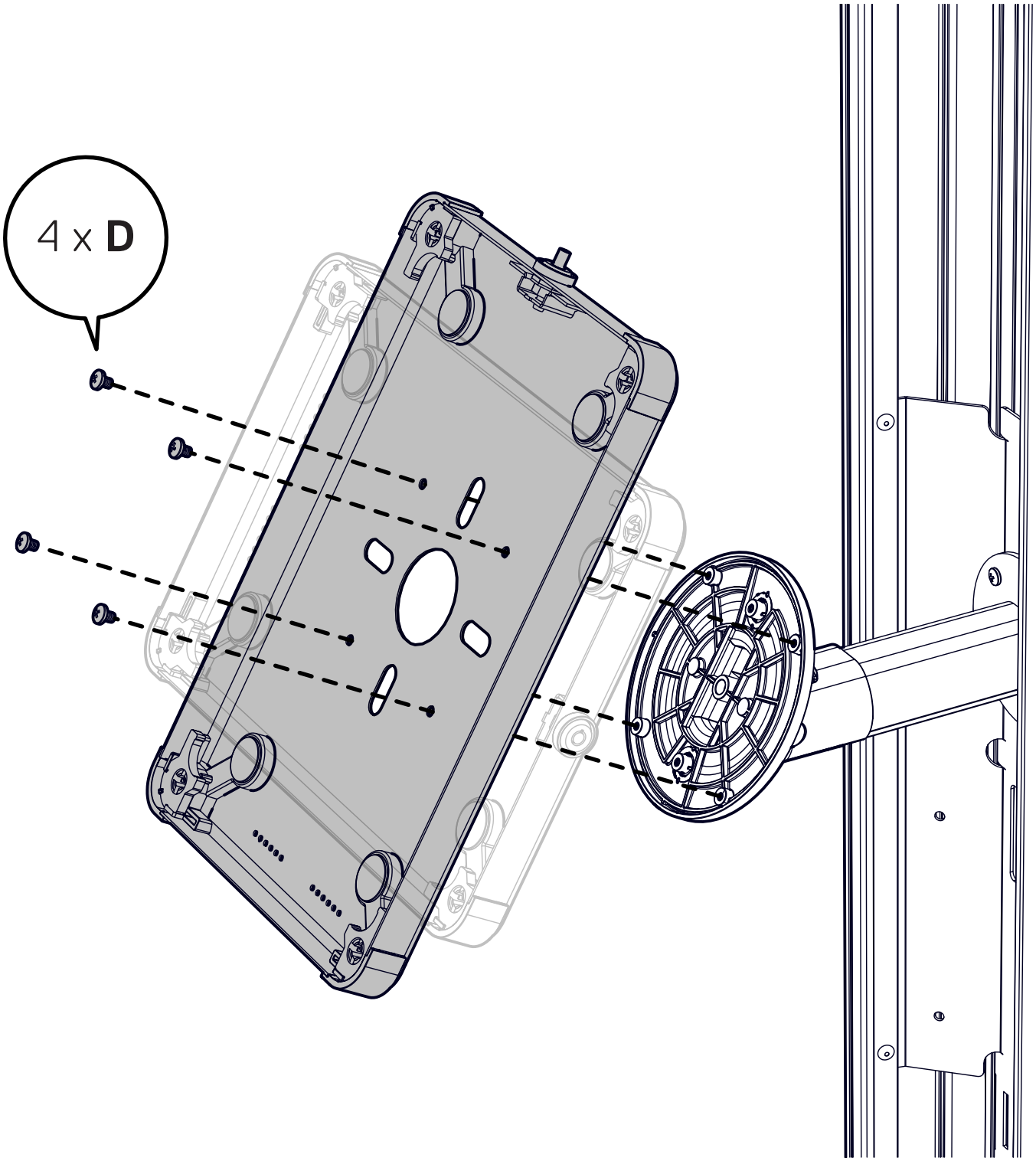

STEP 7/12

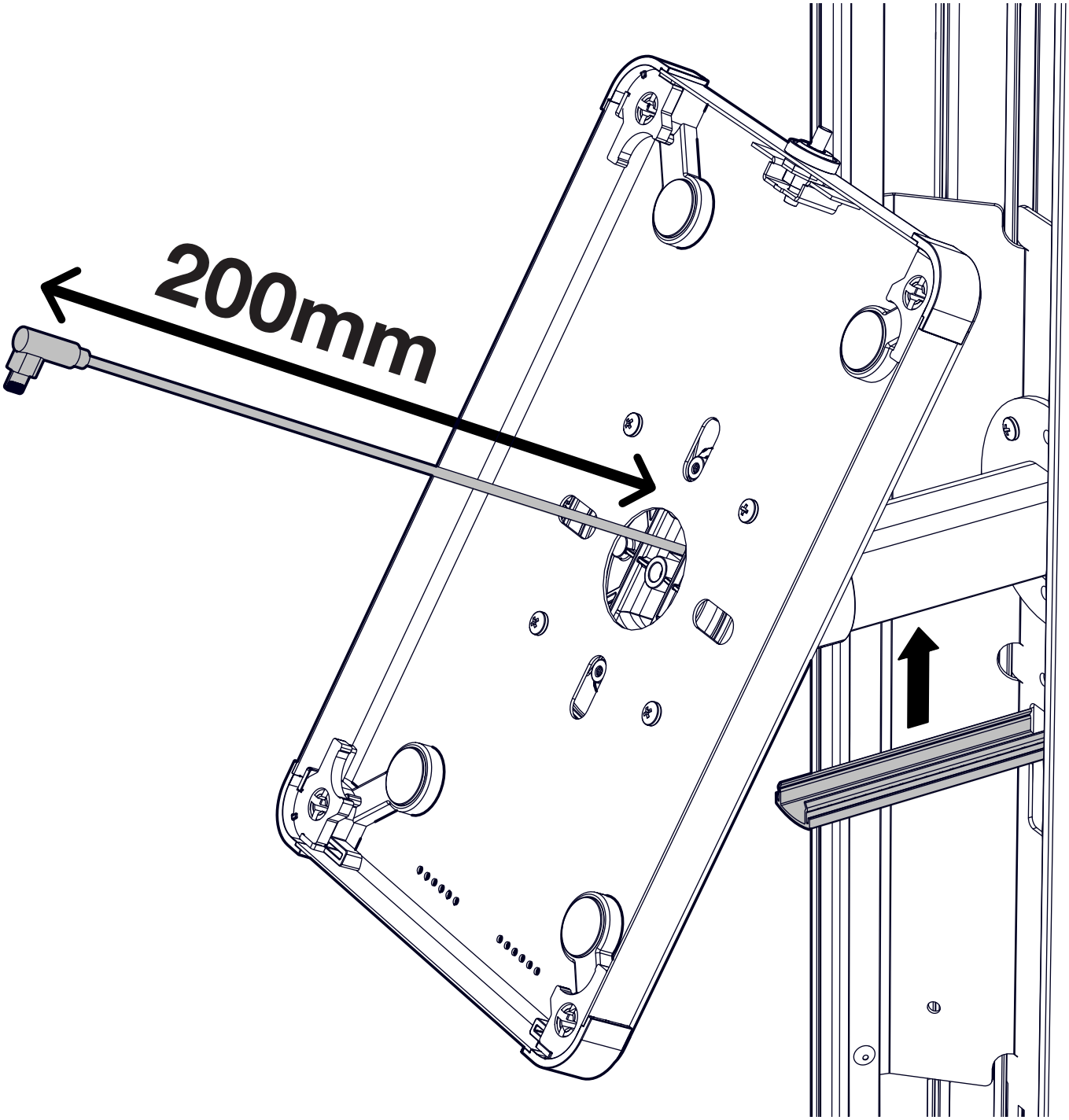

STEP 8/12

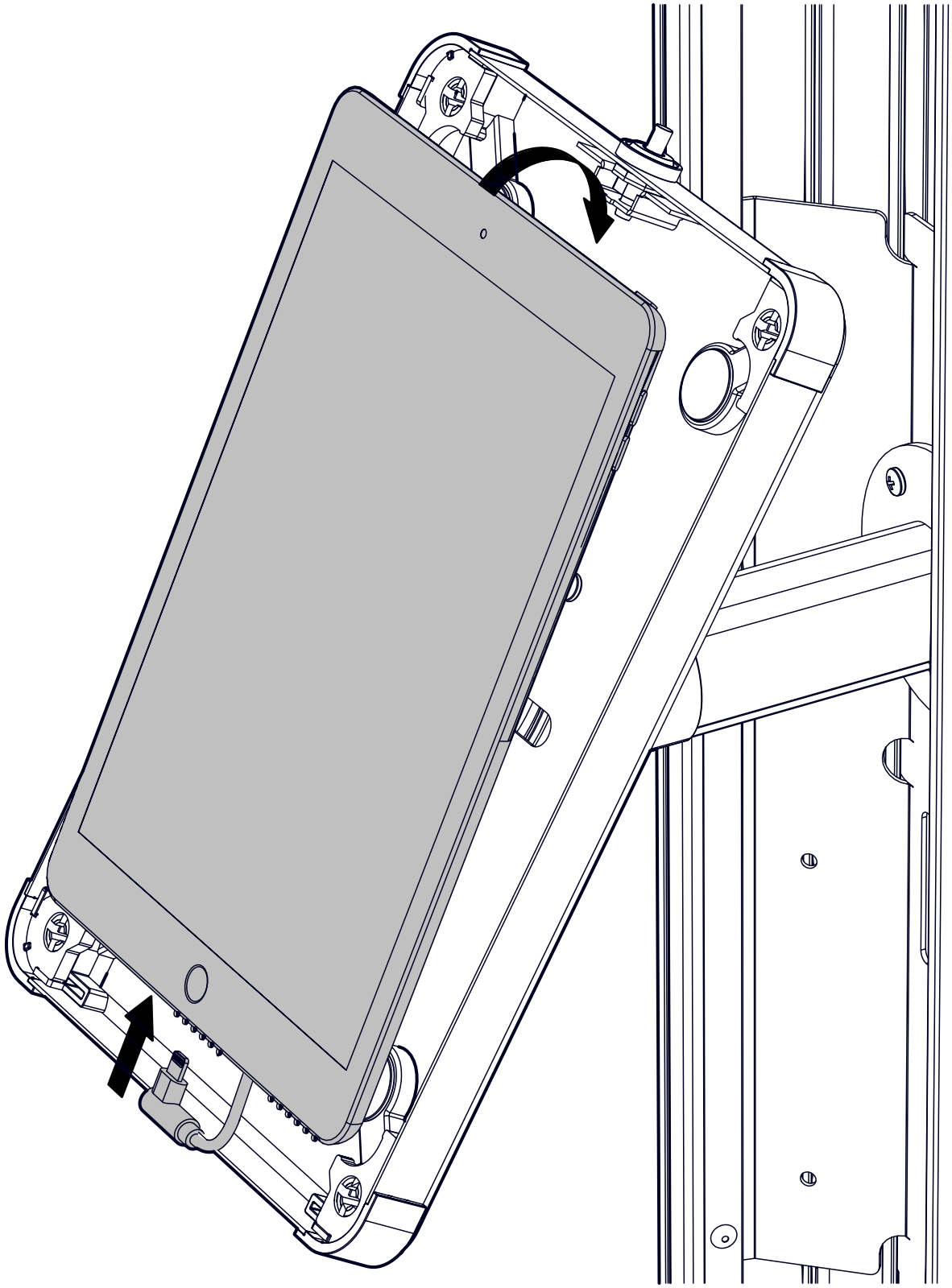

STEP 9/24

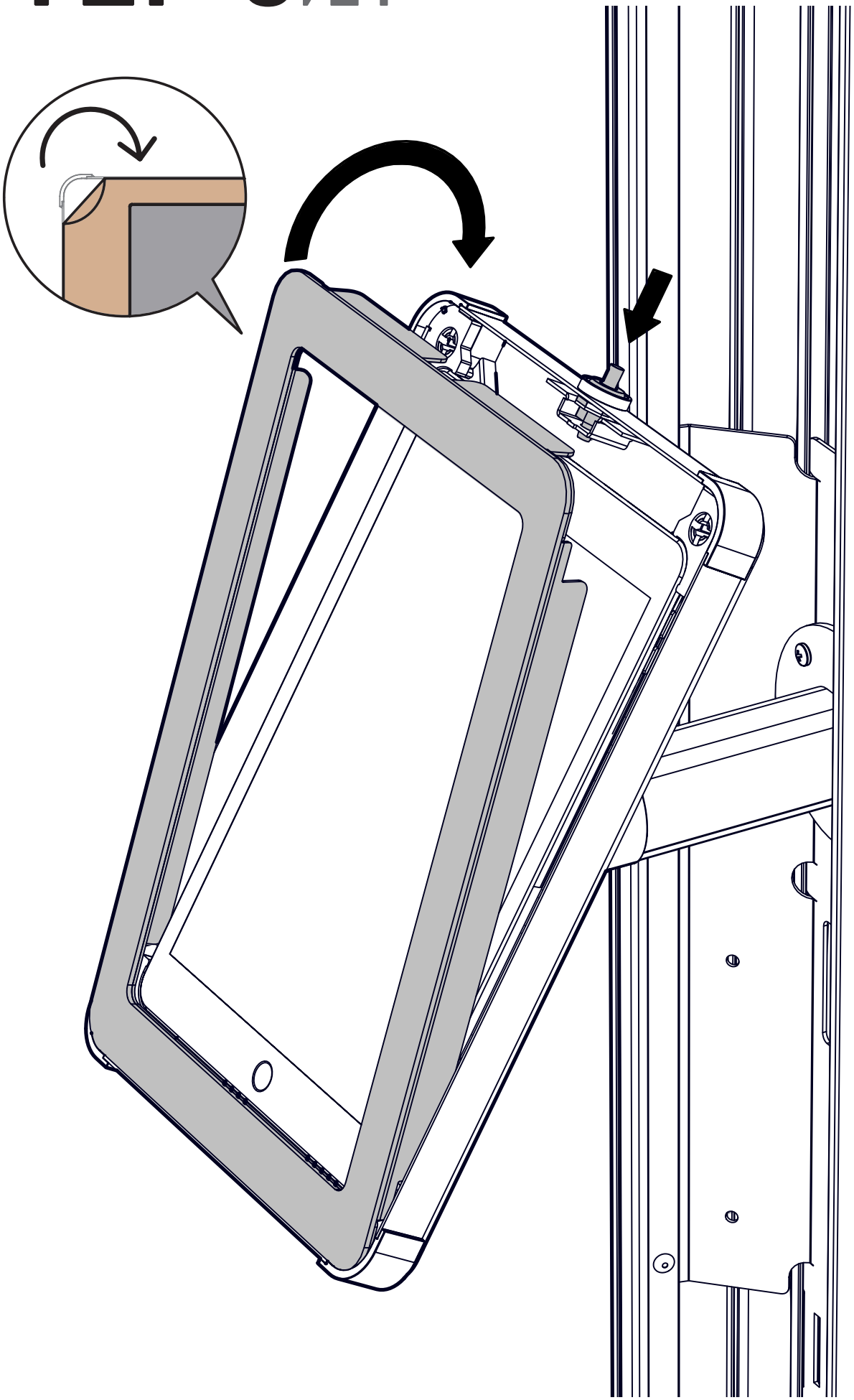

STEP 10/12

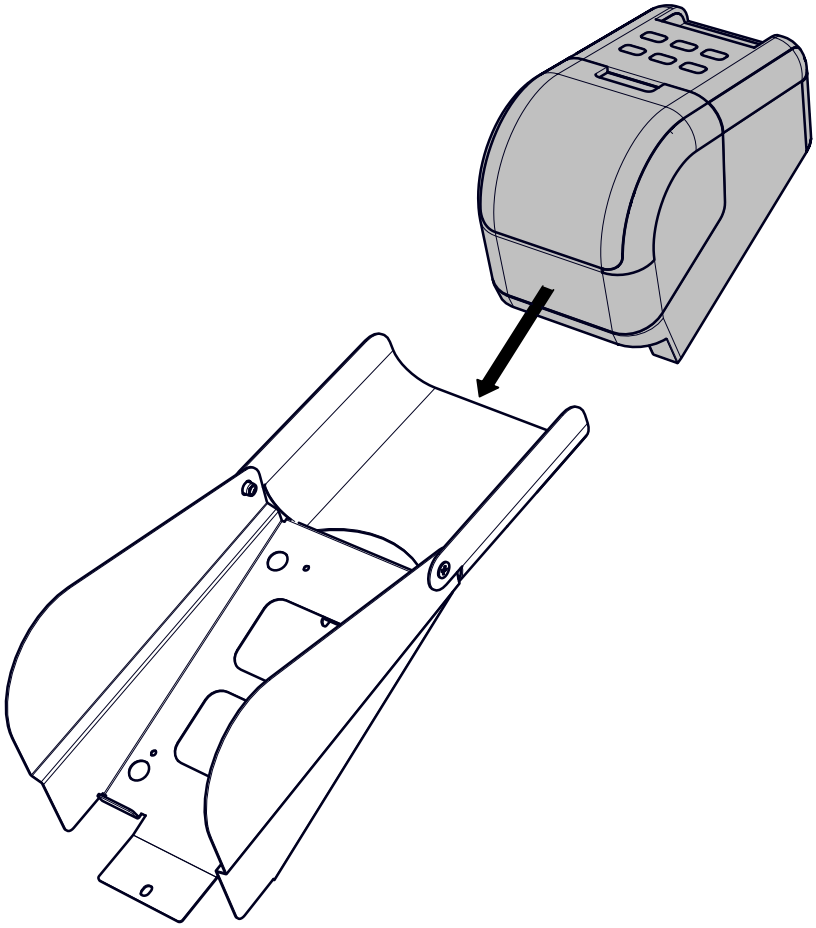

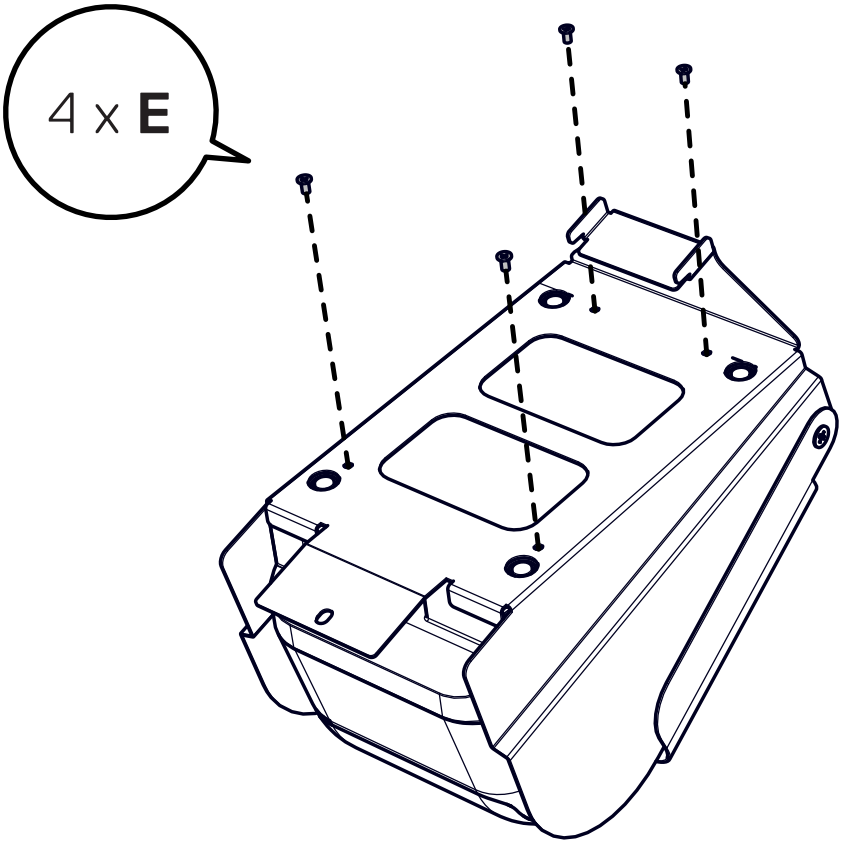

STEP 11/12

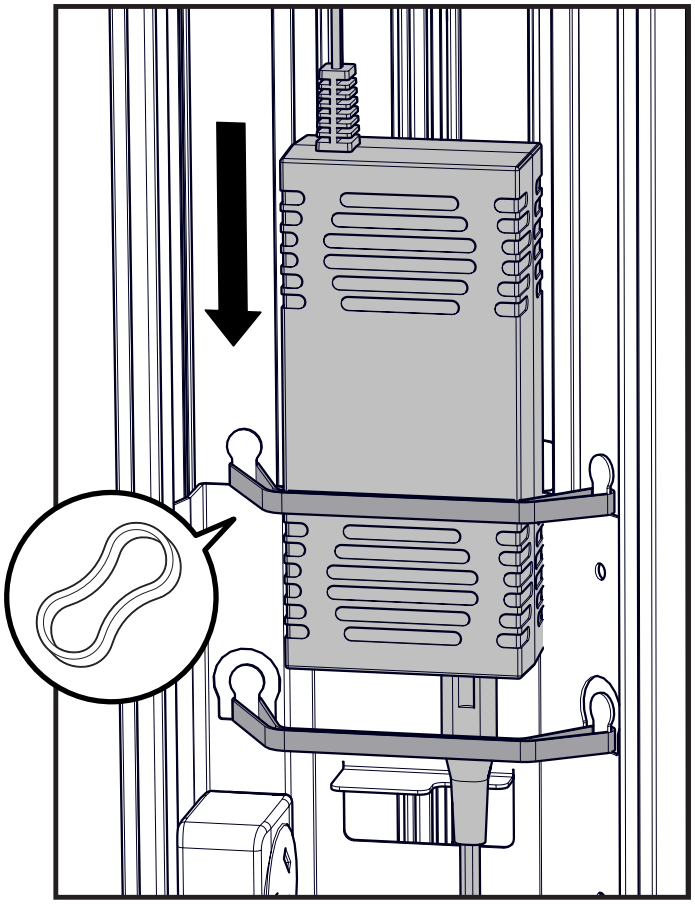

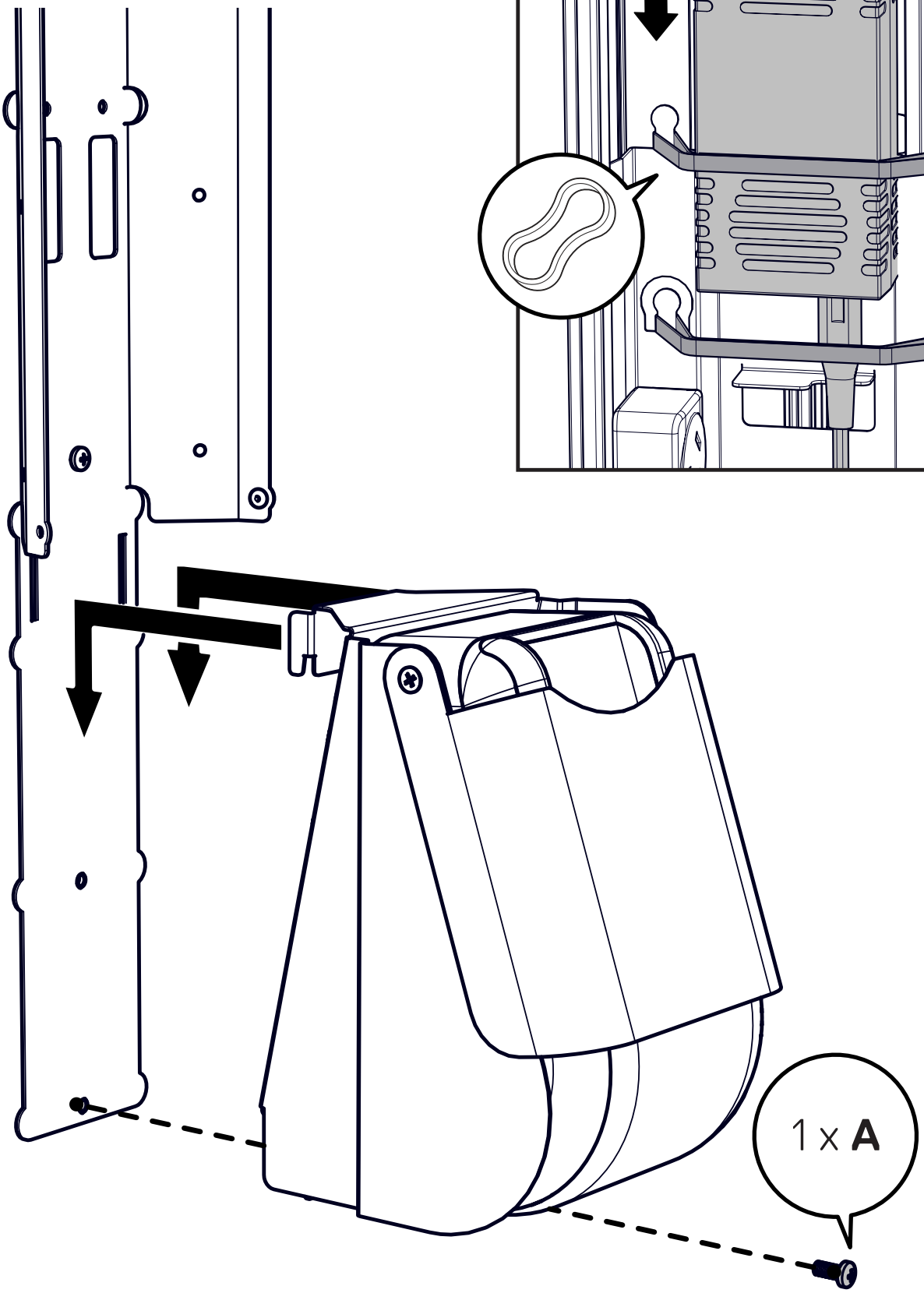
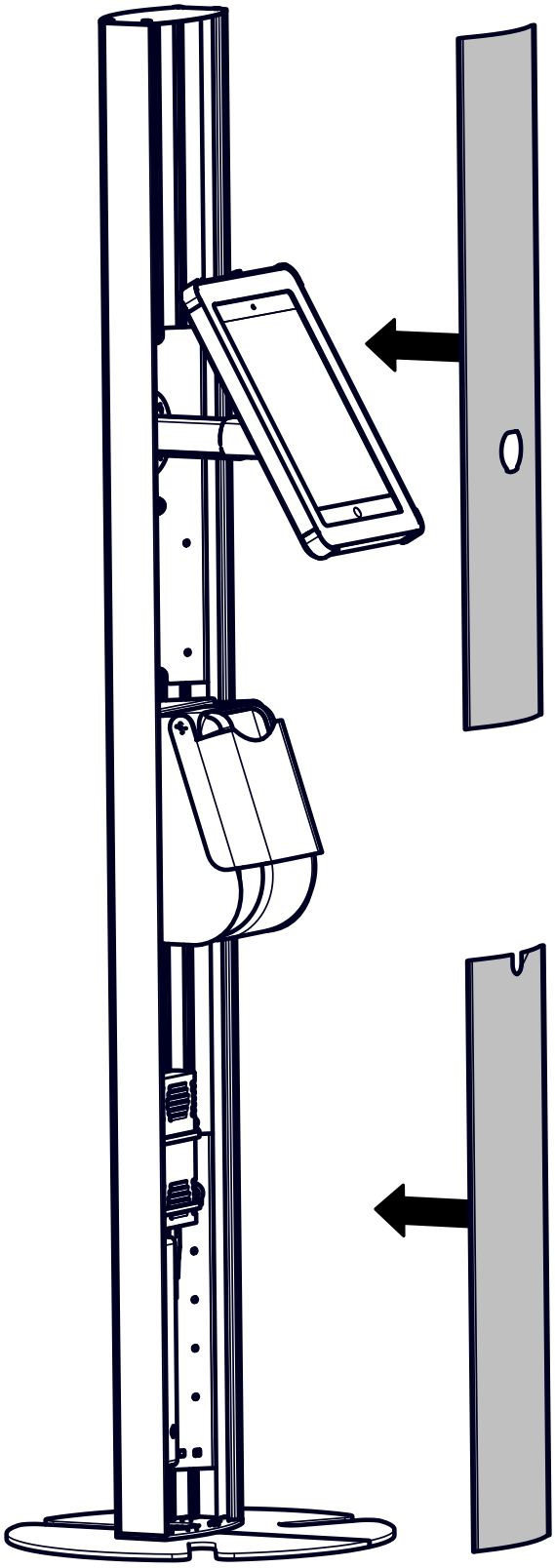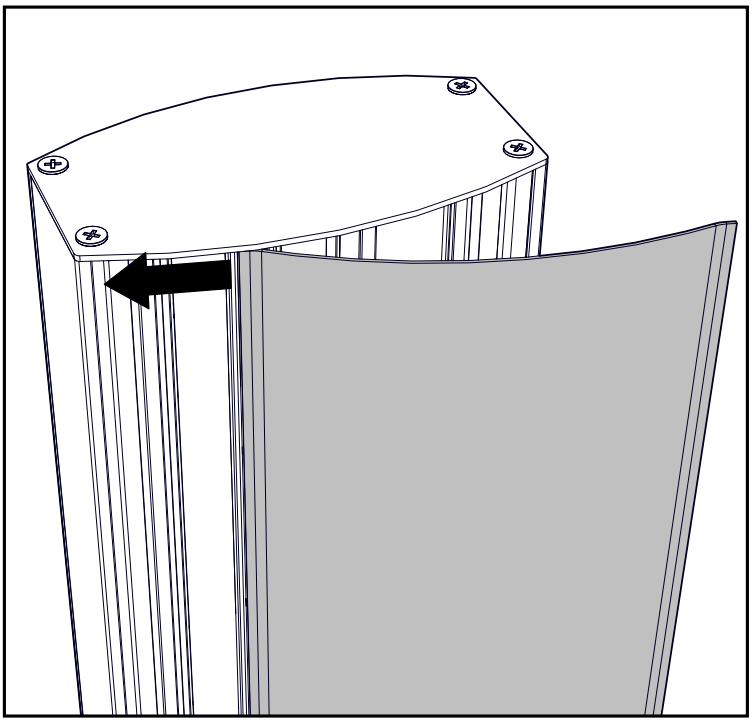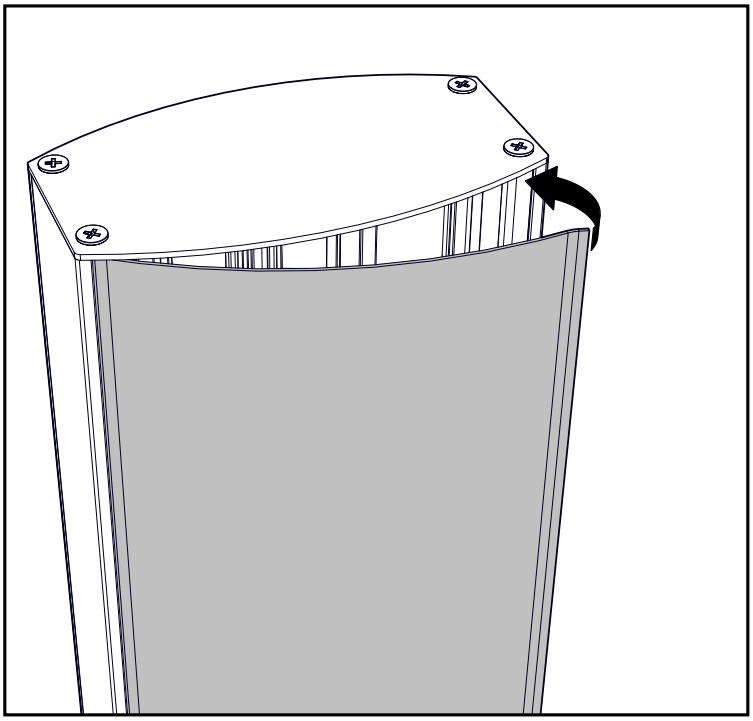
STEP 12/12