T Series
Print E-15

Version 1.0

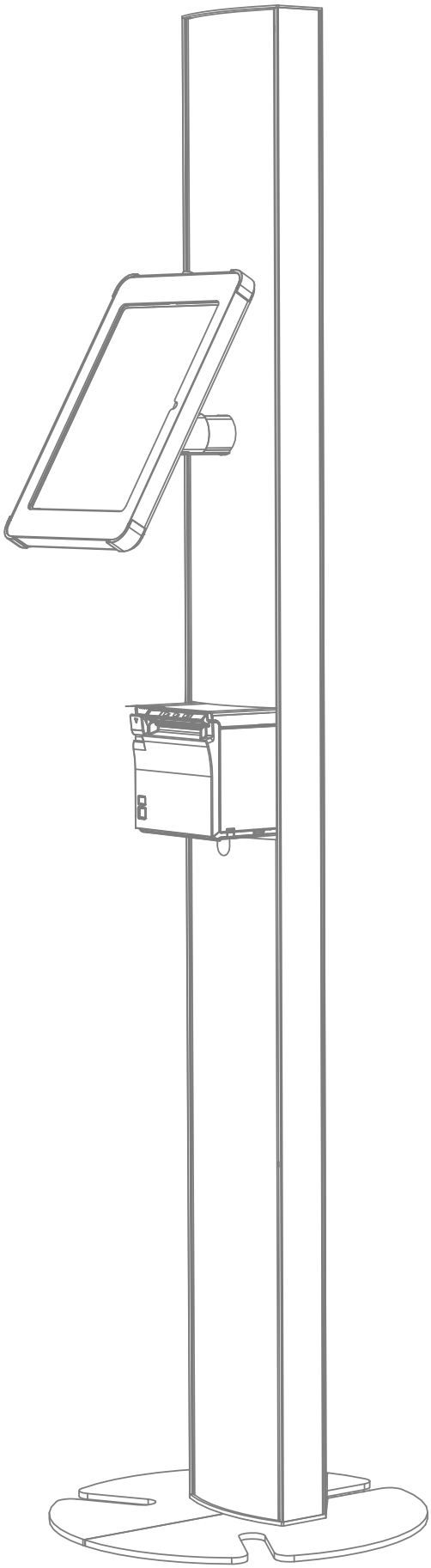

SPROCKET Assembly Guide

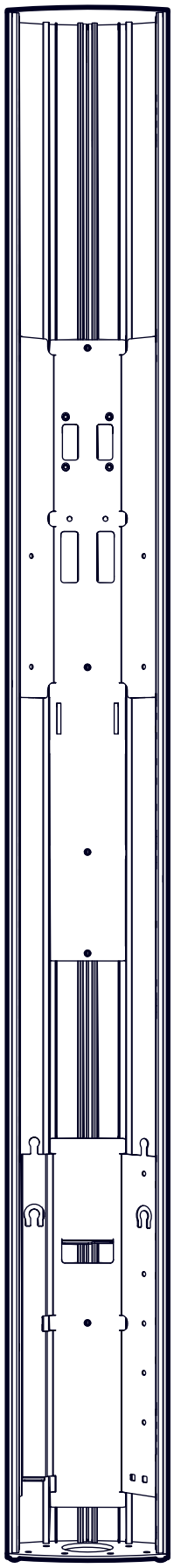

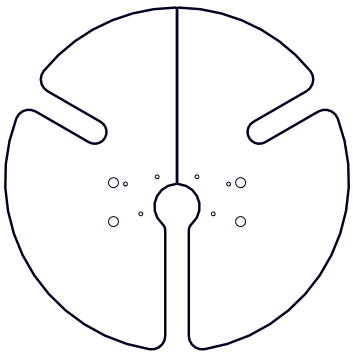

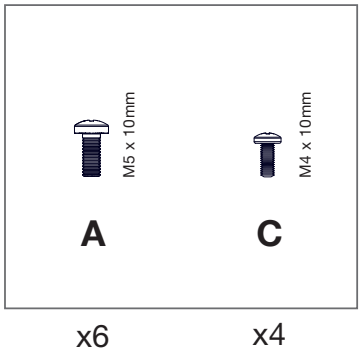
M5 x 10mm
M4 x 10mm
A
C
x6
x4

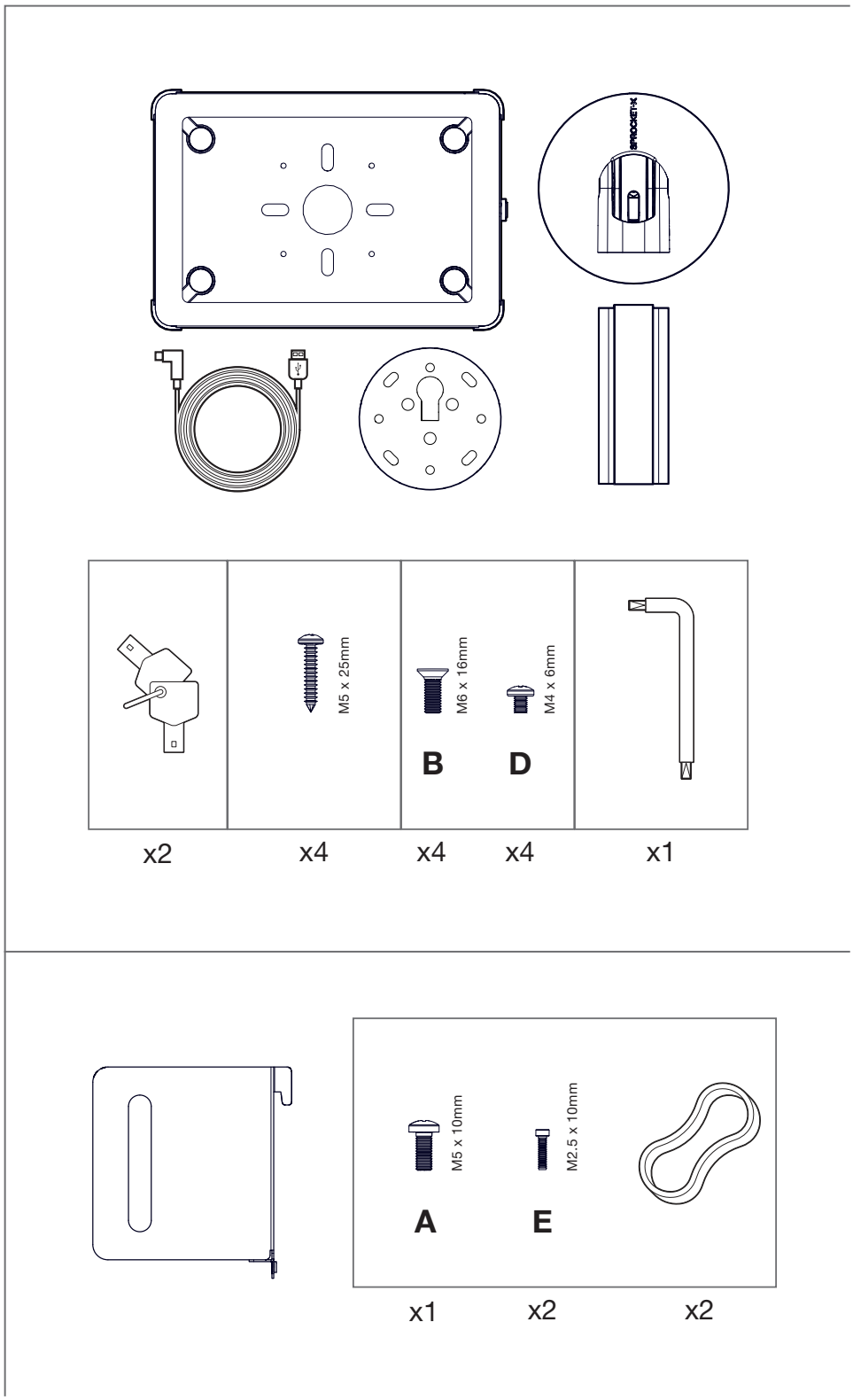
SPROCKET-X
M5 x 25mm
M6 x 16mm
M4 x 6mm
B
D
x2
x4
x4
x4
x1
M5 x 10mm
M2.5 x 10mm
A
E
x1
x2
x2

STEP 1/12

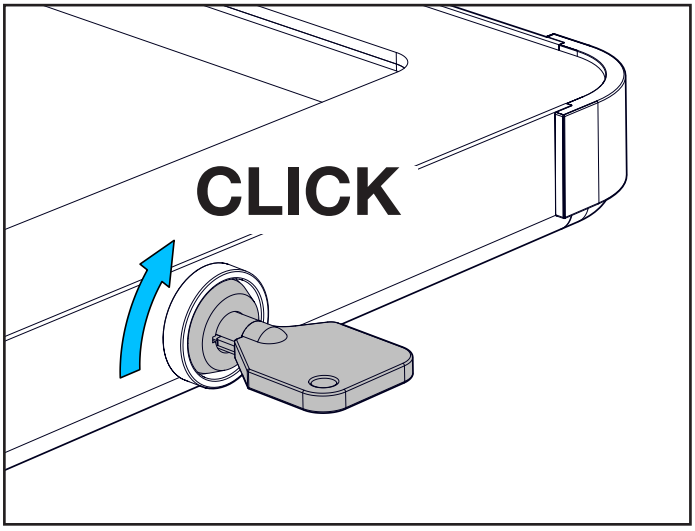

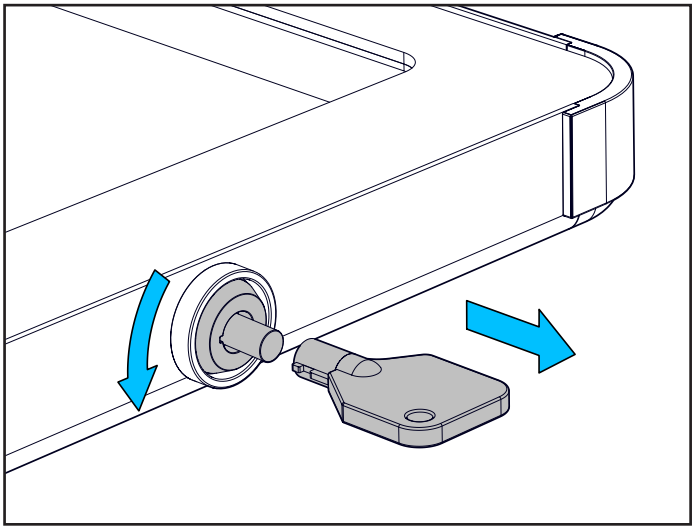

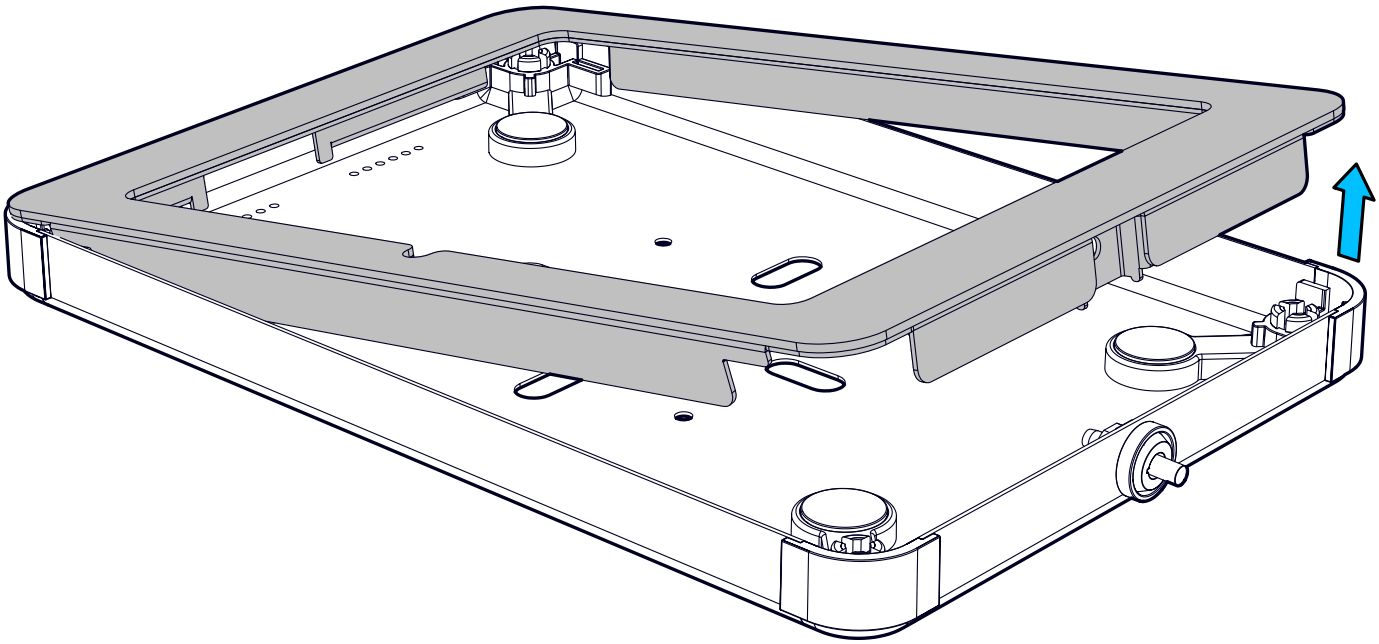

STEP 2/12

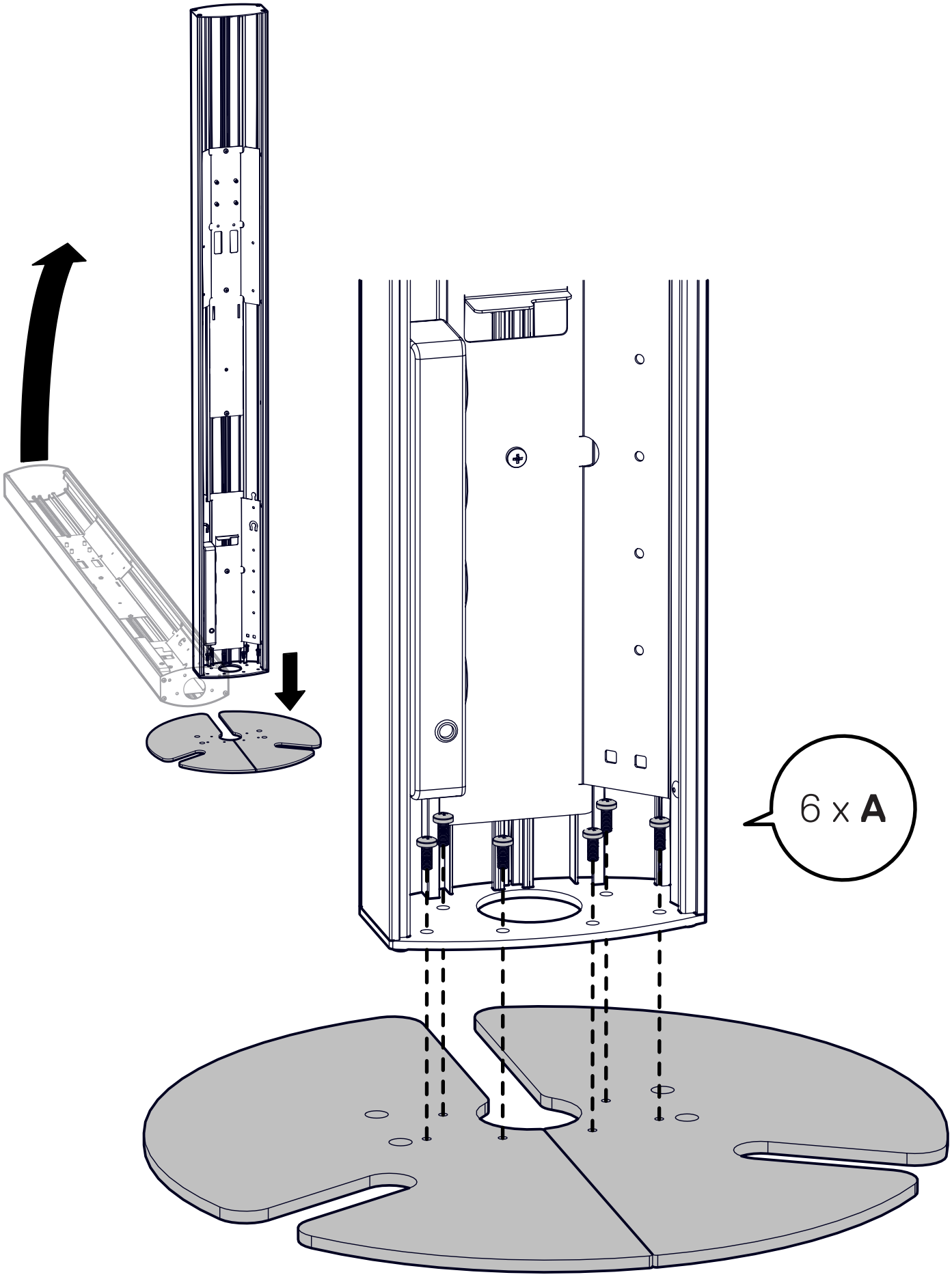

STEP 3/12

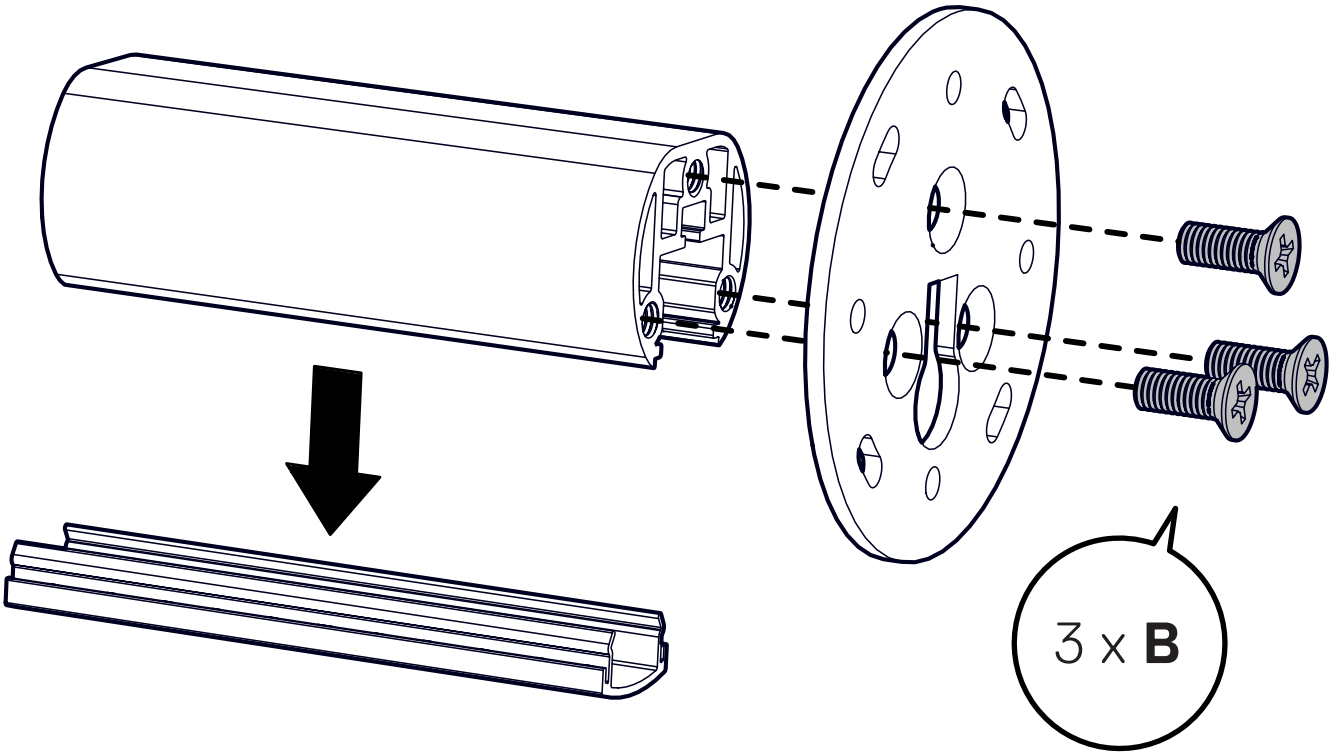

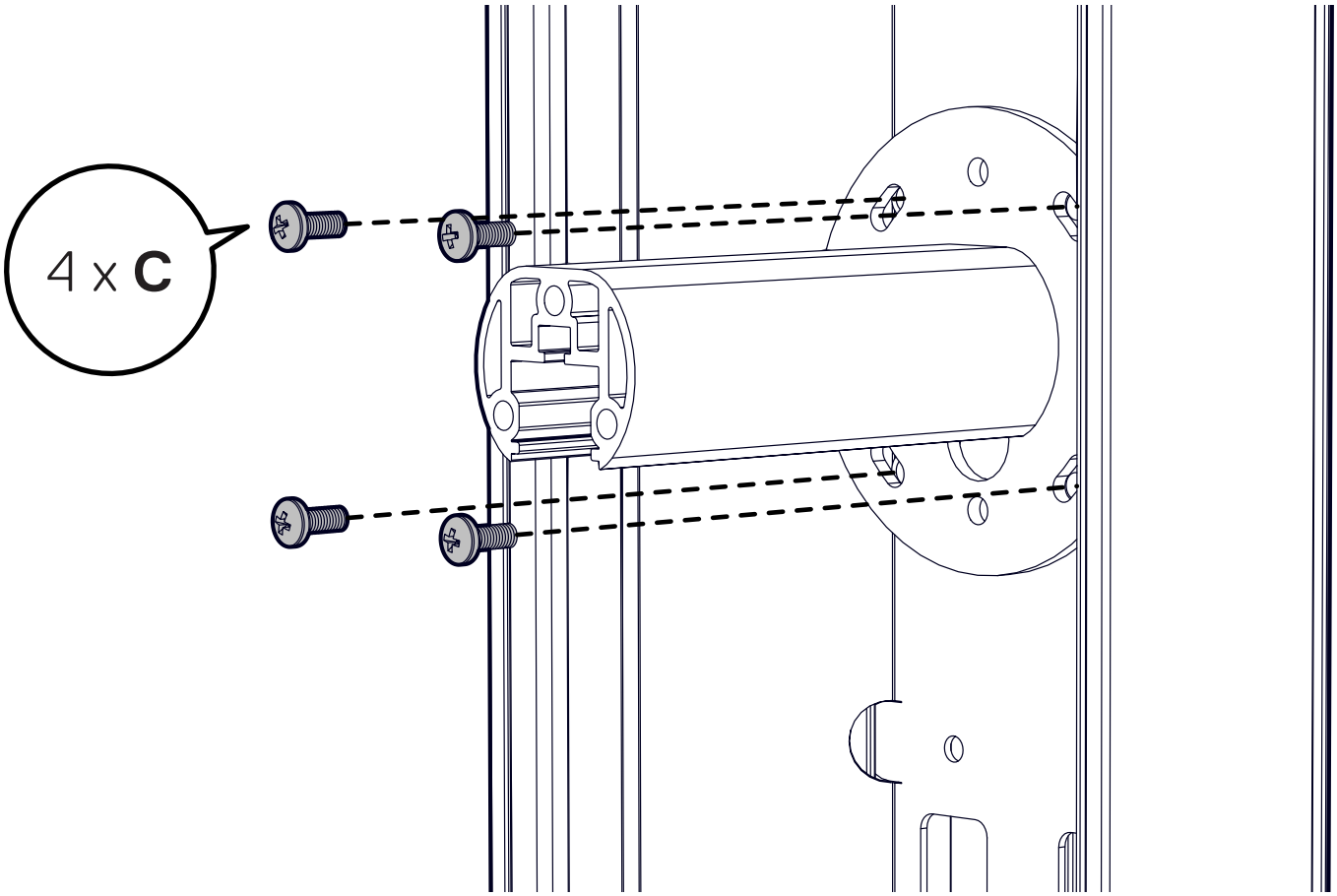

STEP 4/12

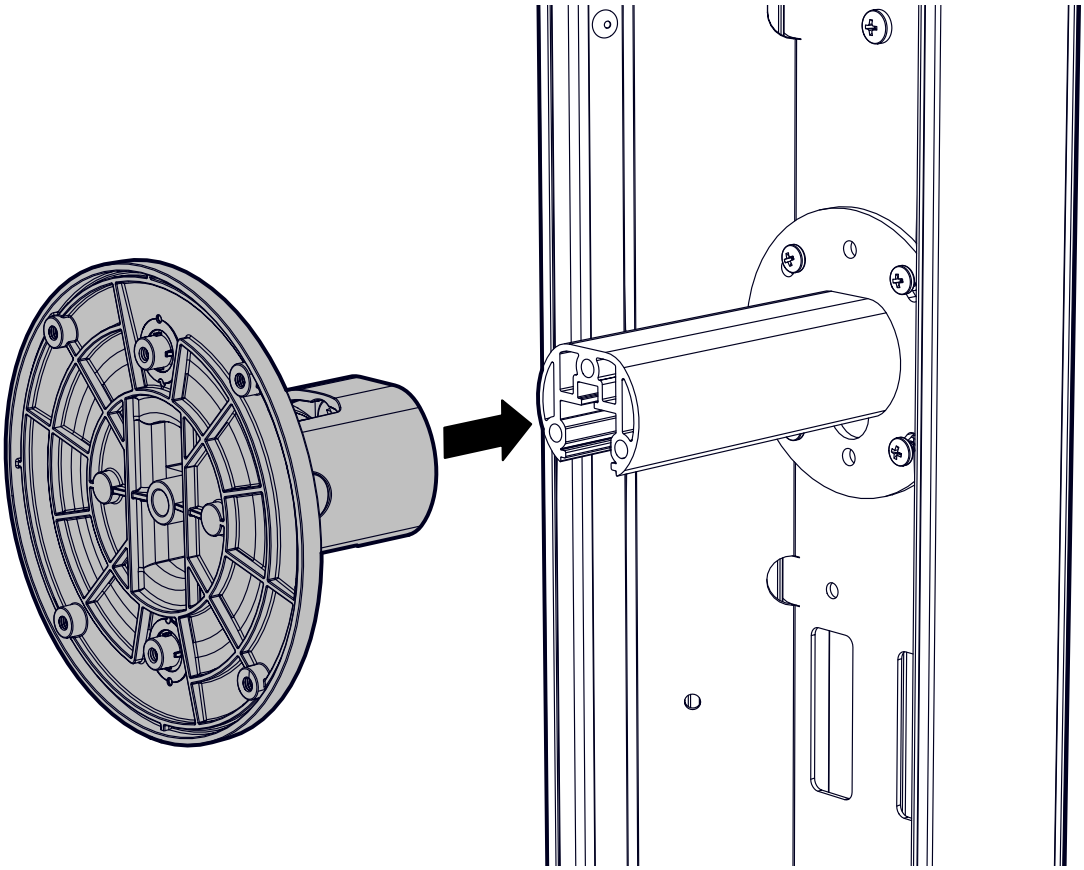

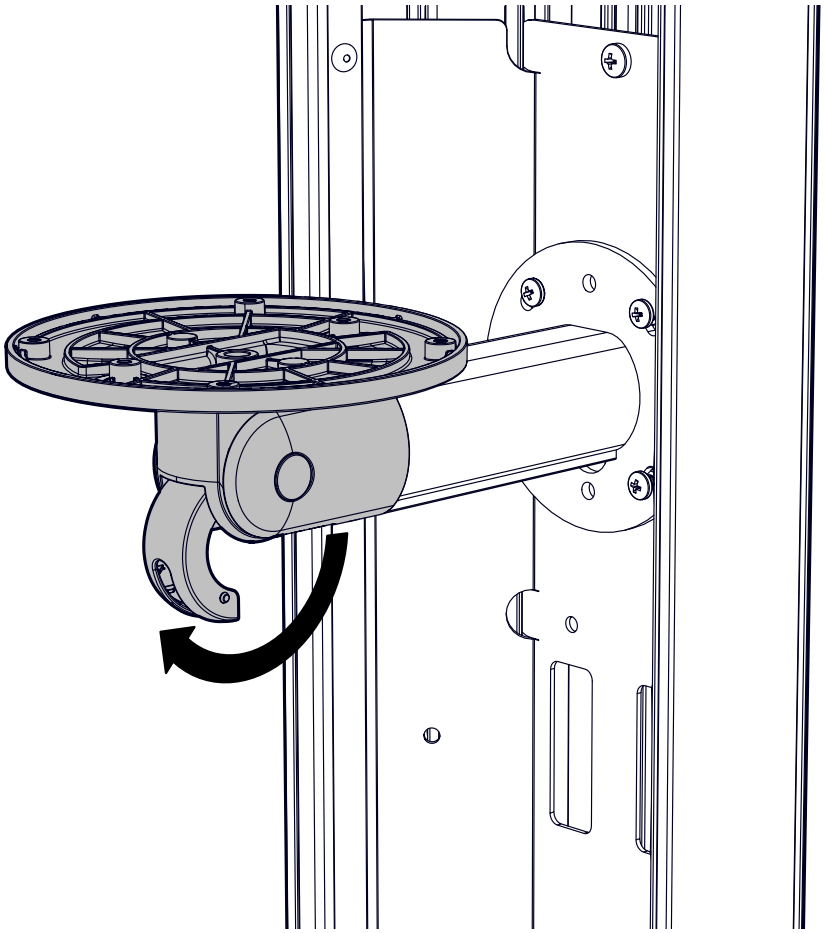

STEP 5/12

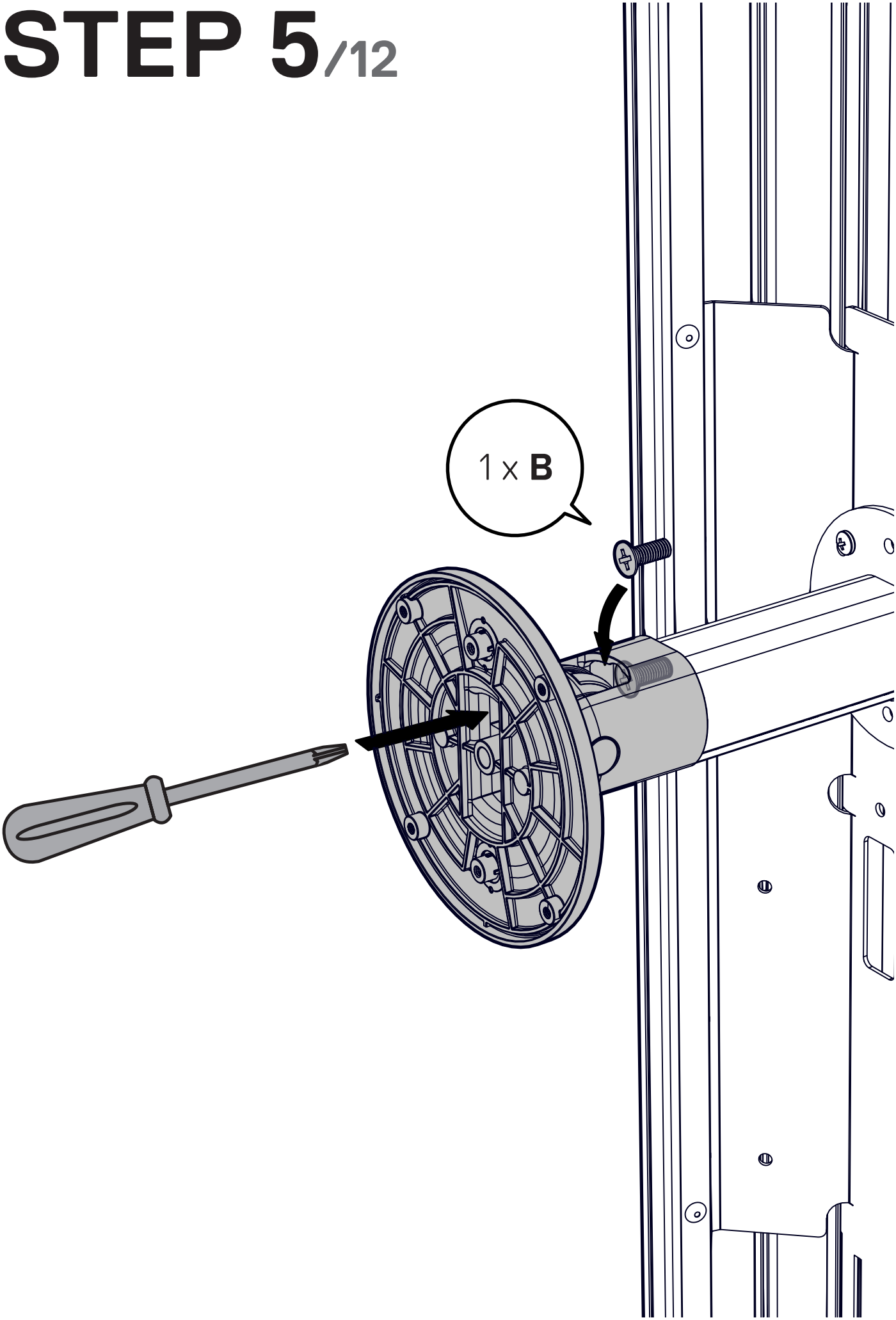

STEP 6/12

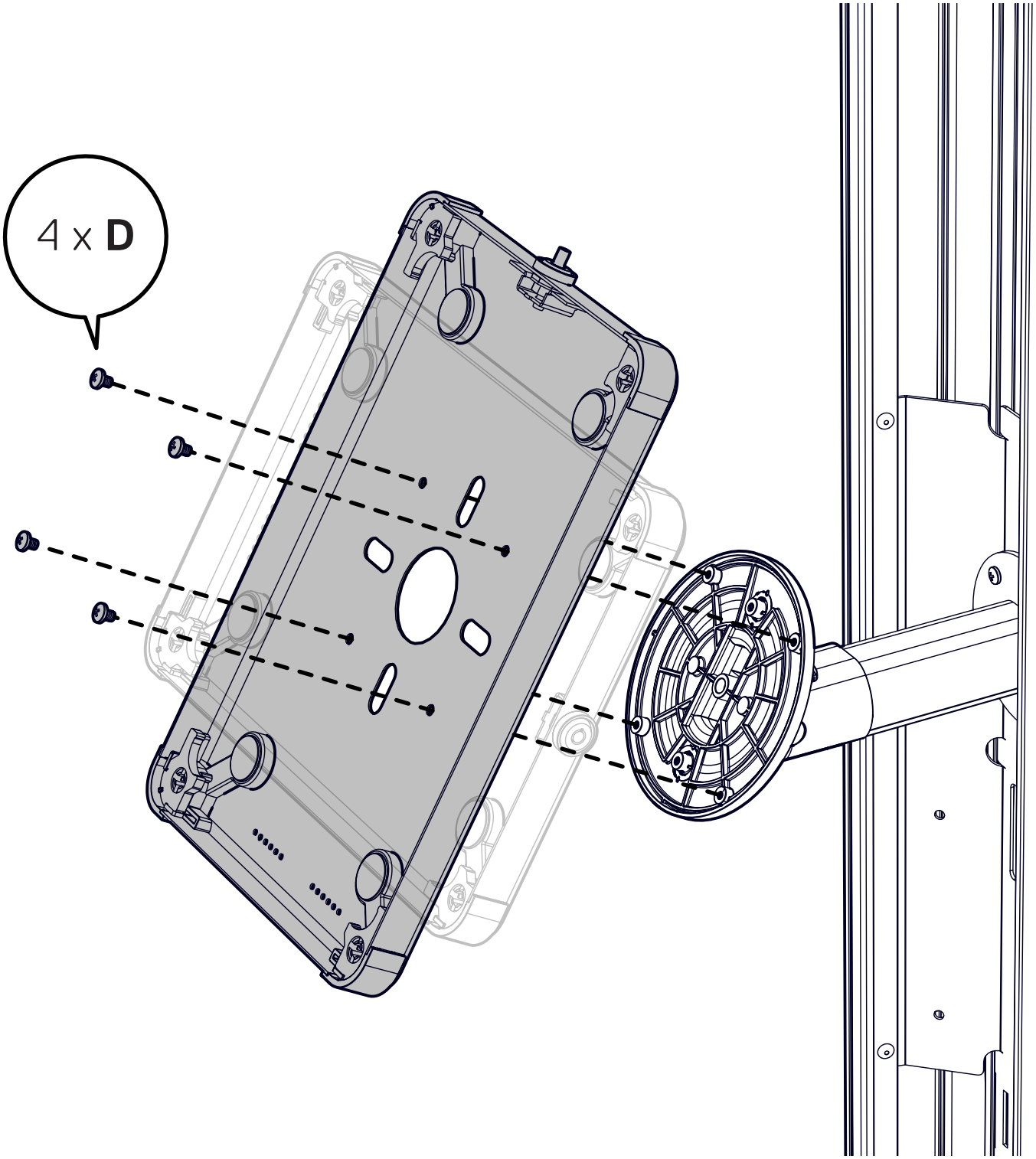

STEP 7/12

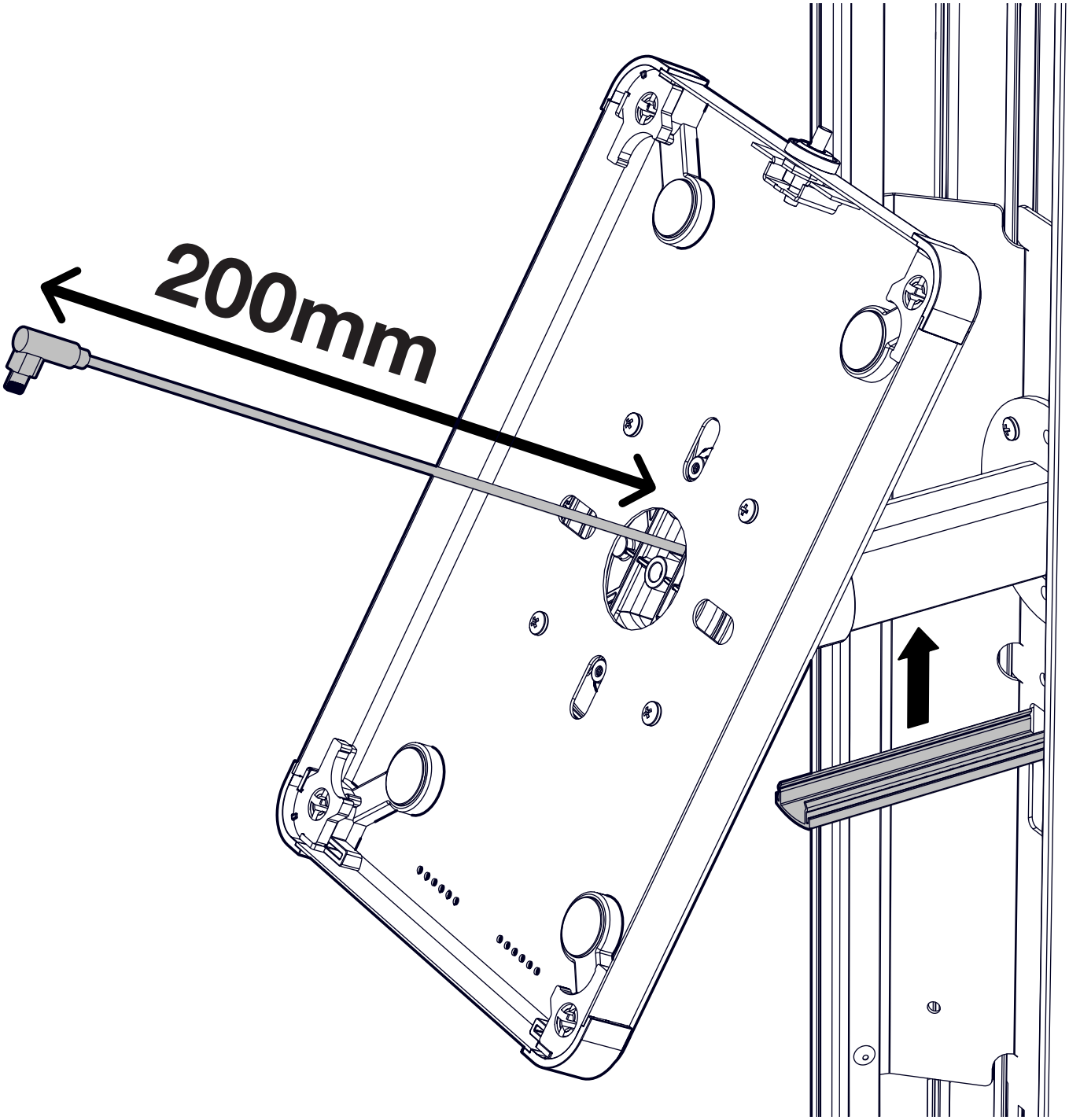

STEP 8/12

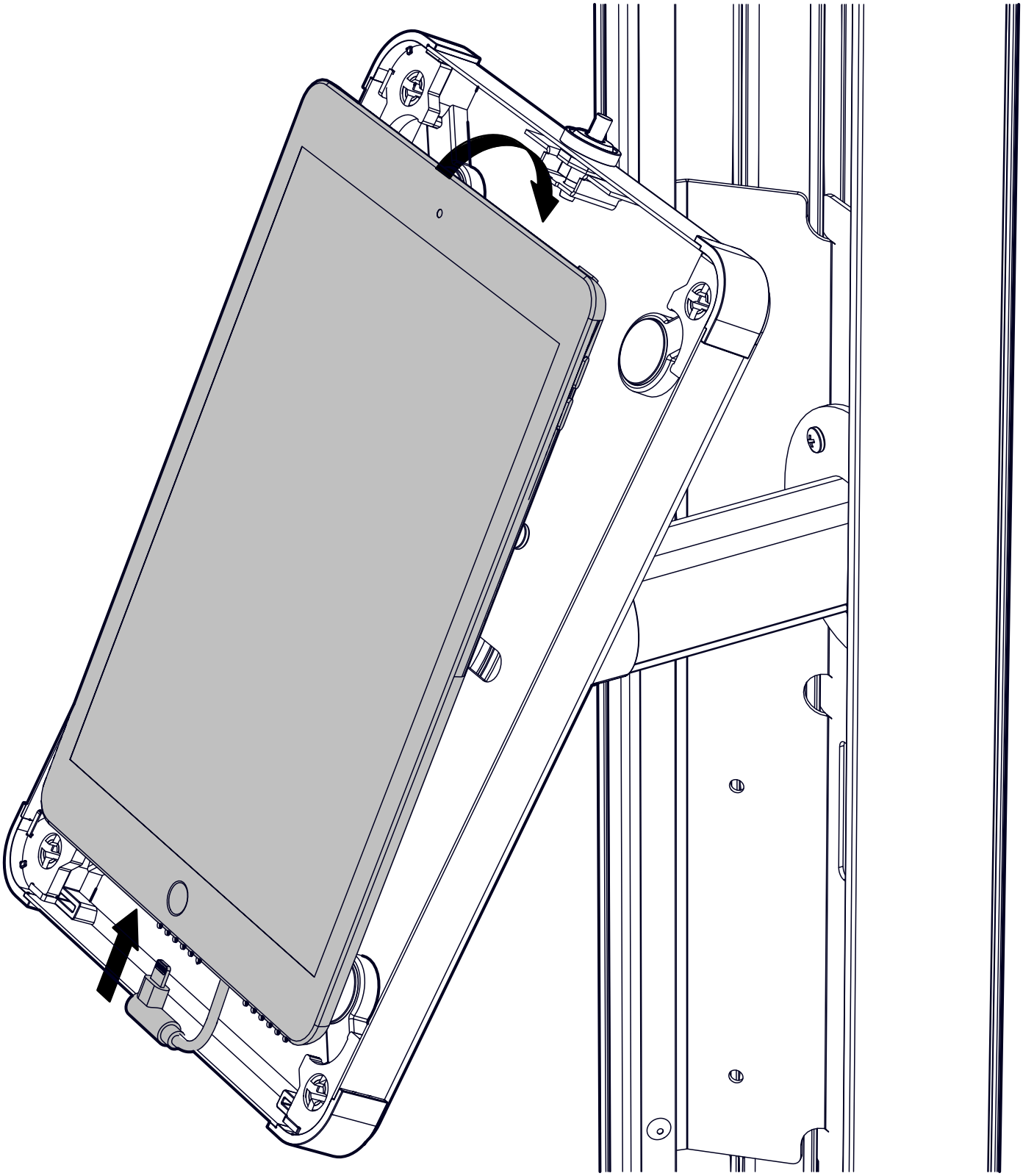

STEP 9/24

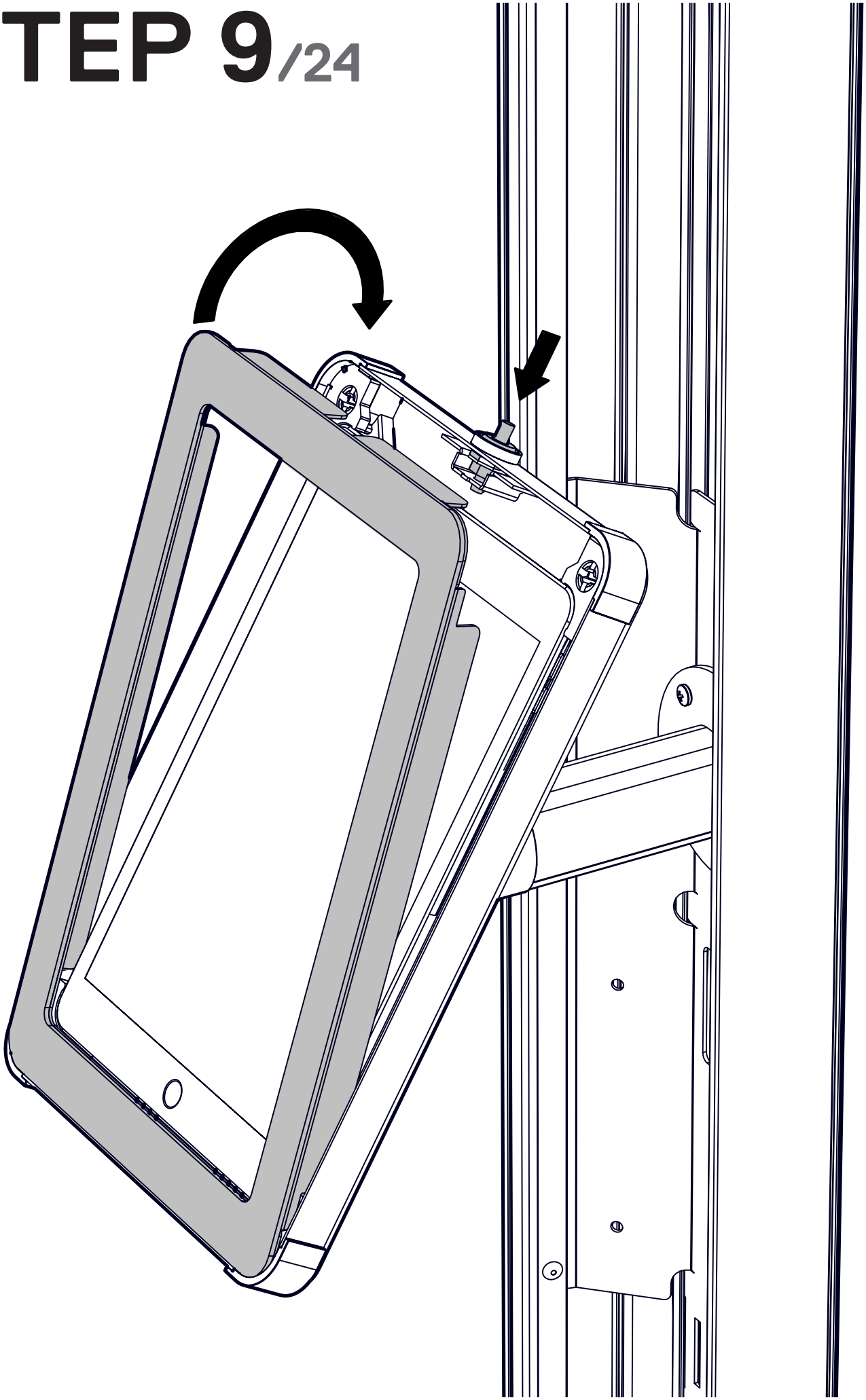

STEP 10/12

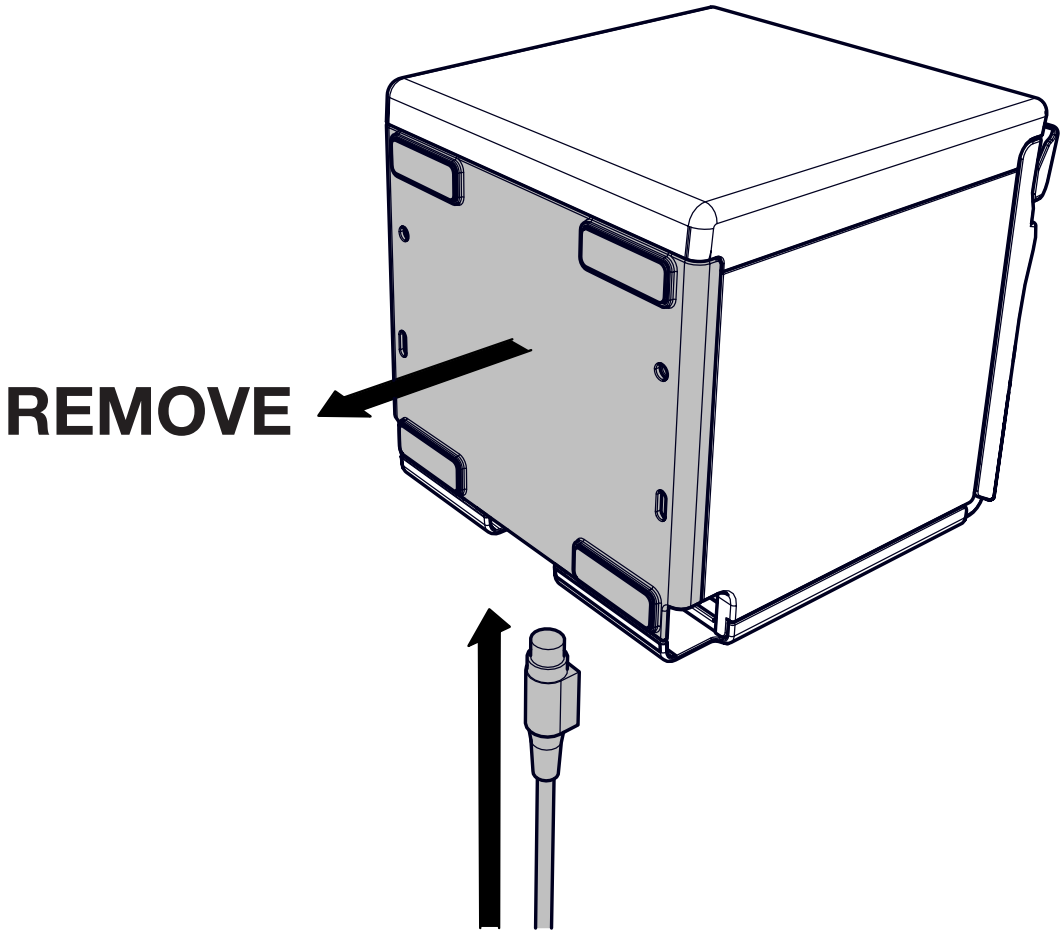

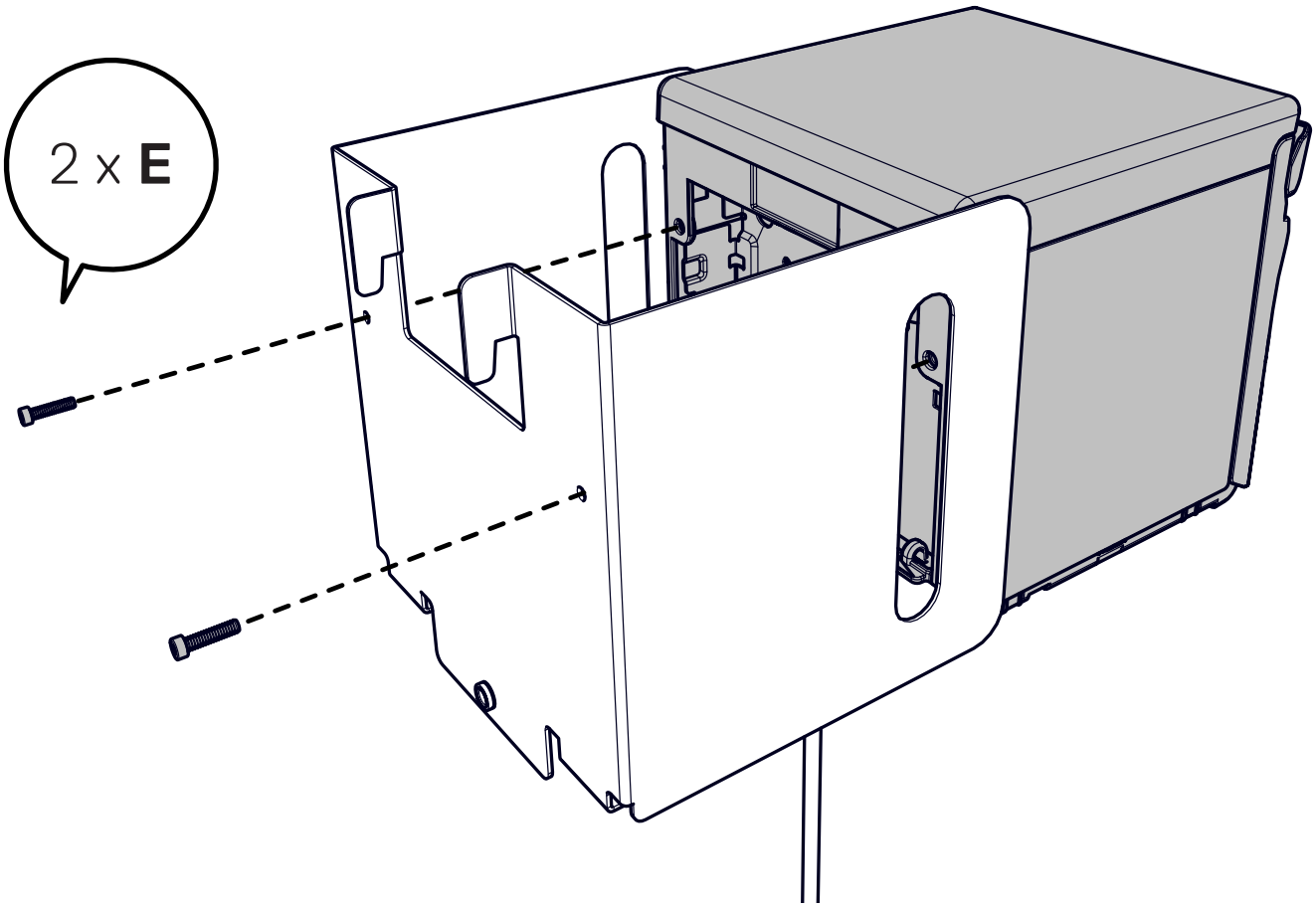

STEP 11/12

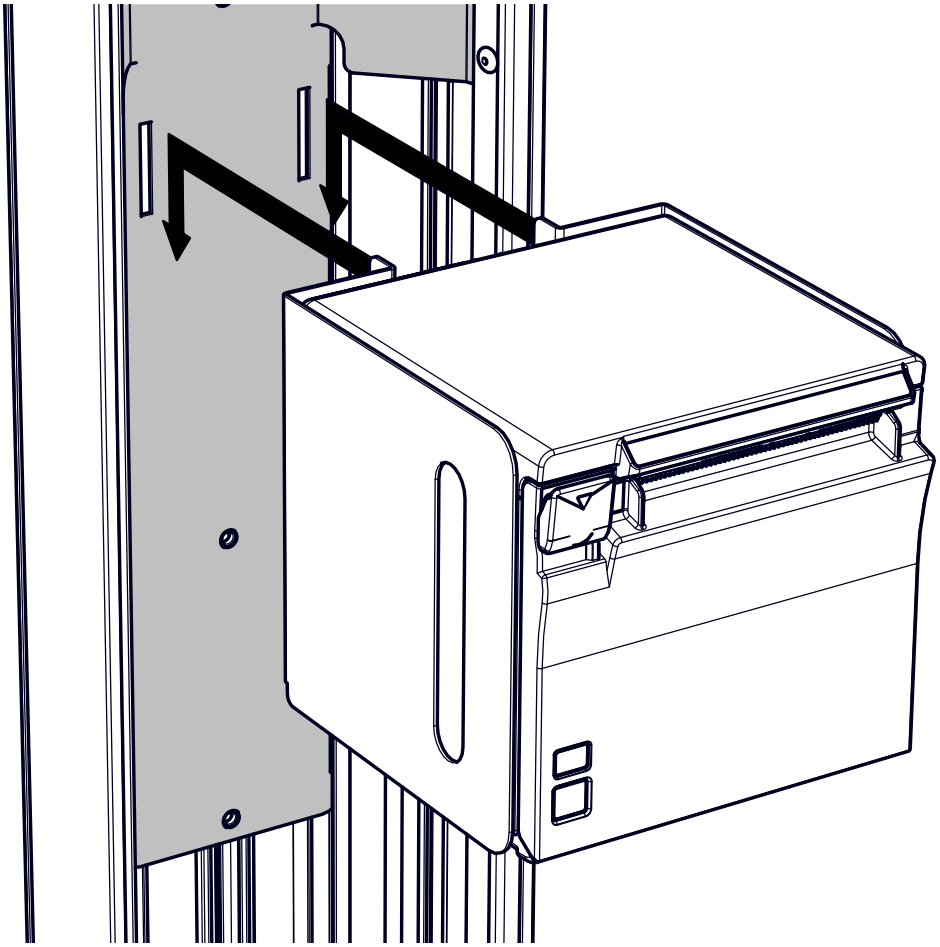

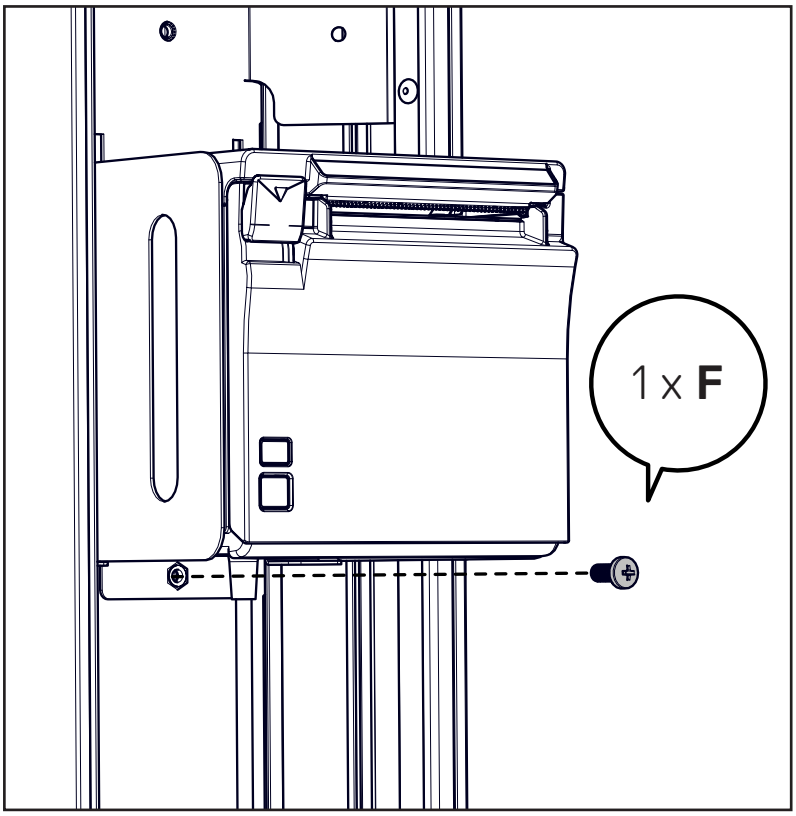

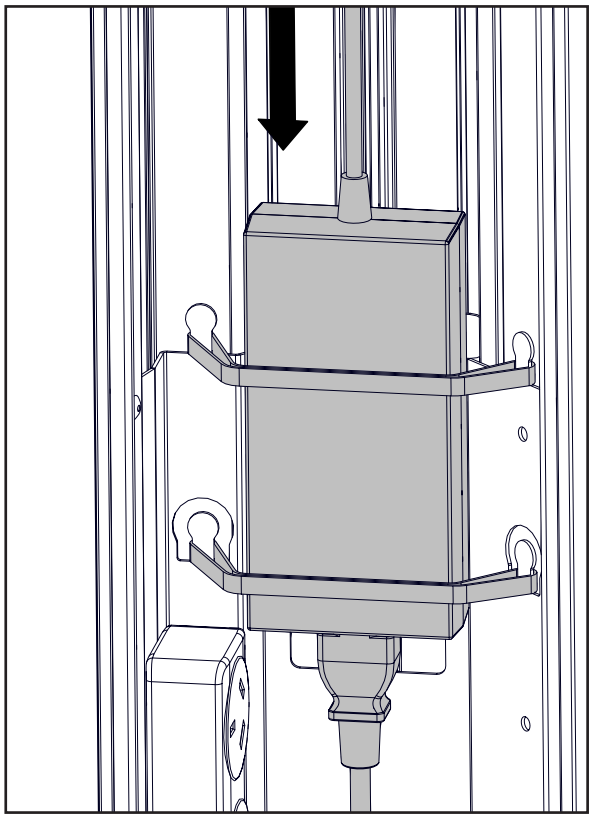
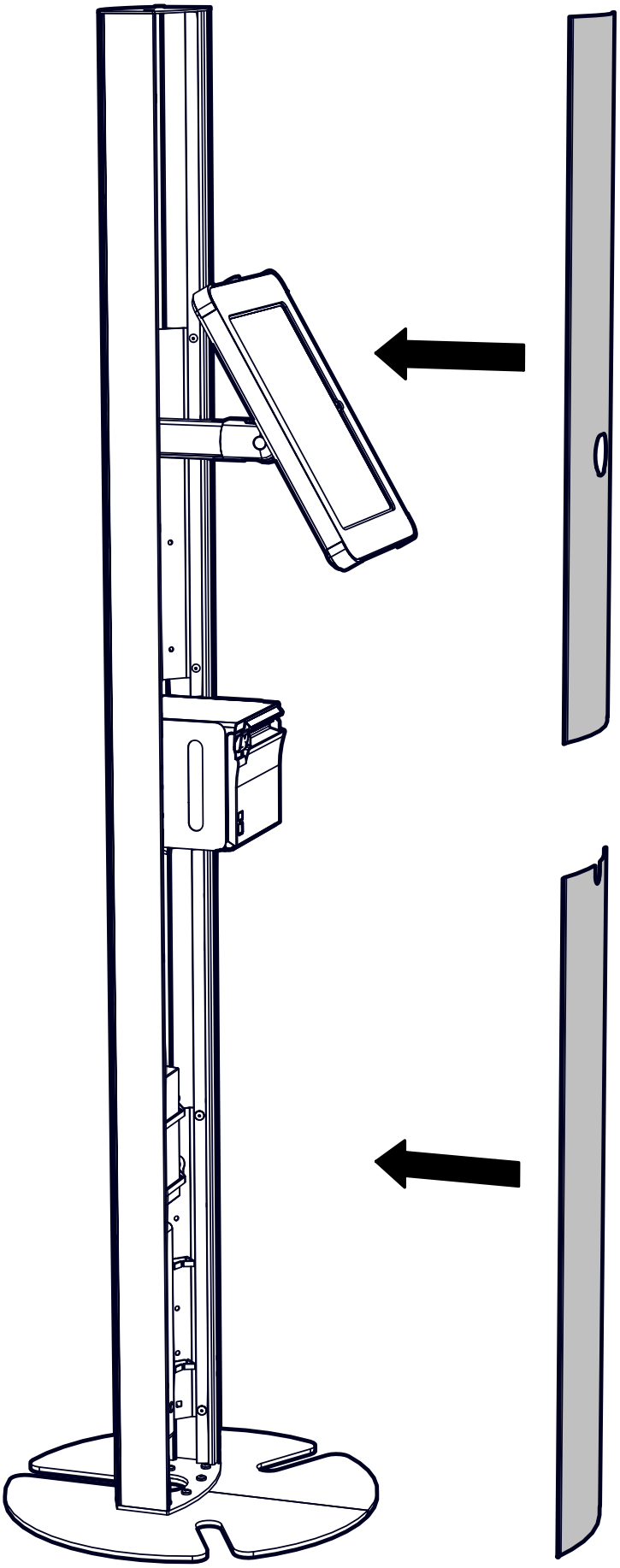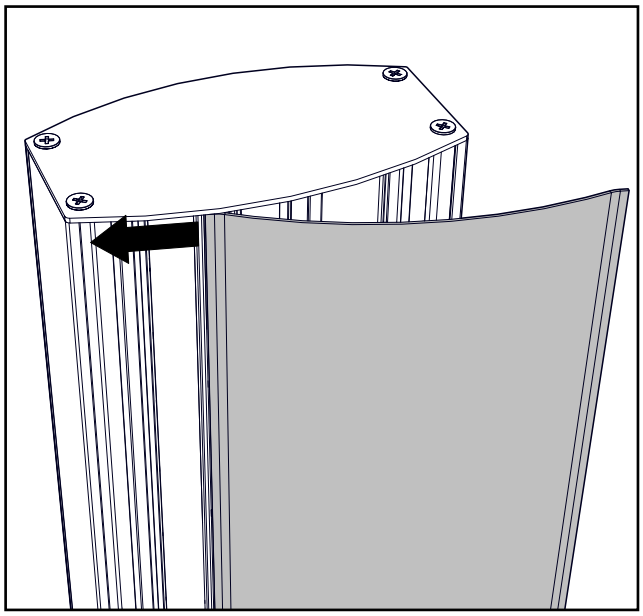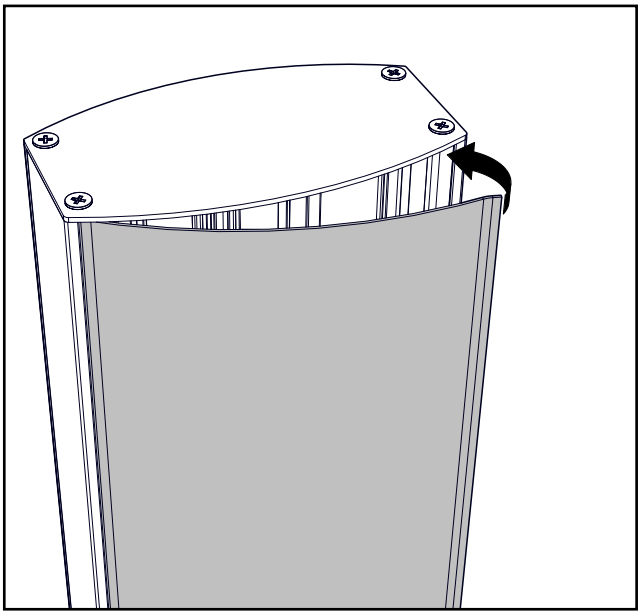
STEP 12/12